SMALL HYDRO – Basics

Ludvika, 2012-10-23



Content

1. Company Presentation Kössler GmbH & Co KG
2. Inquiry Documents
3. Selection of Hydro Turbines
4. Hydraulic Governor
5. Transient Conditions
6. Engineering Tools
7. Engineering Choices

Content

8. Mechanically and Electrically Protections
9. Performance Verification
10. Performance Figures
11. Manufacturing Process
12. Product Portfolio
13. Partners and Suppliers
14. Questions

Chapter 1 –
Company Presentation



Company Presentation

Company Presentation

Chapter 2 –
Inquiry Documents



Inquiry Documents

Sample

Chapter 3 –
Selection of Hydro Turbines



Application Samples Overview

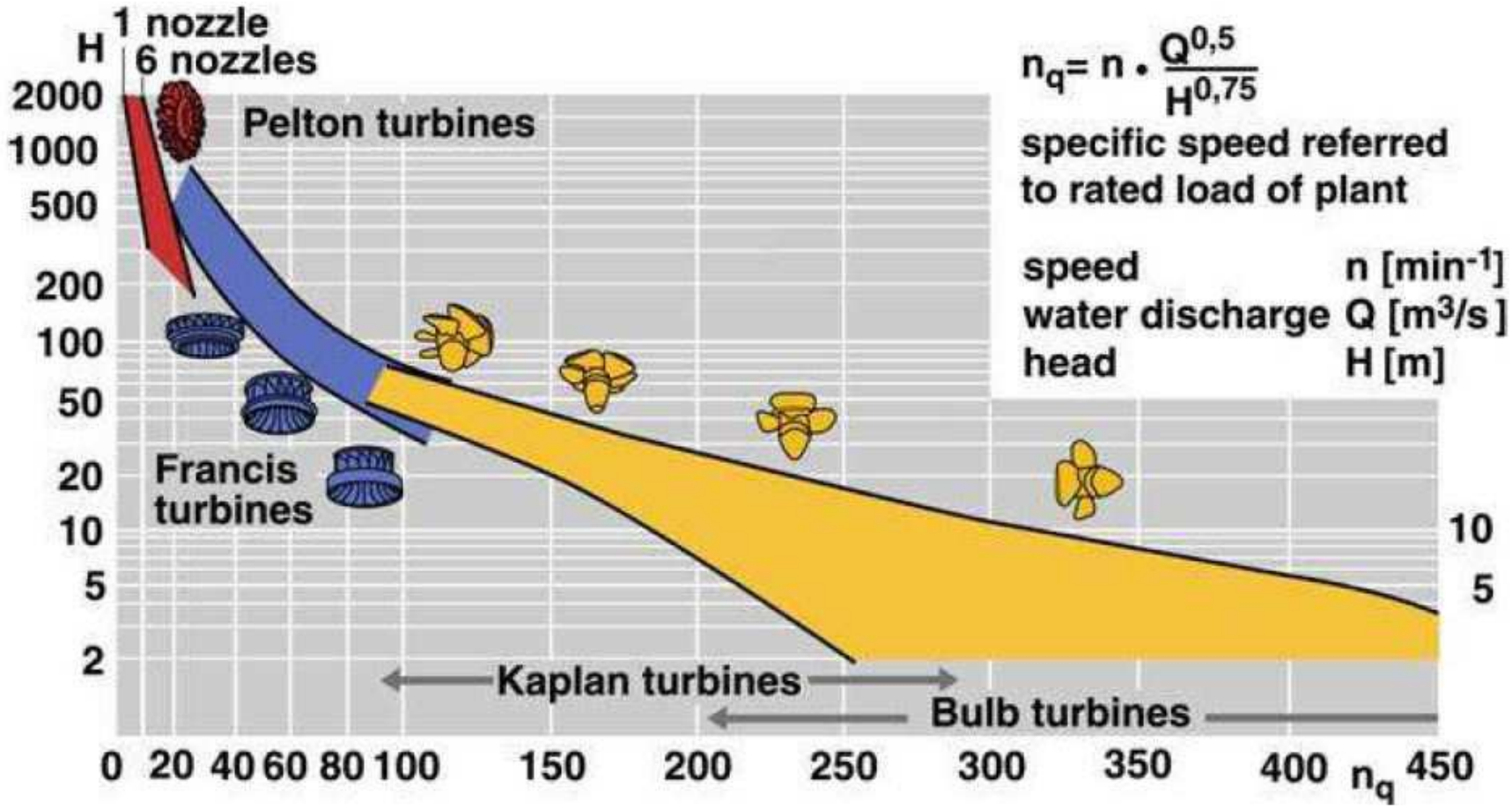

Francis turbines horizontal – Don Walterio

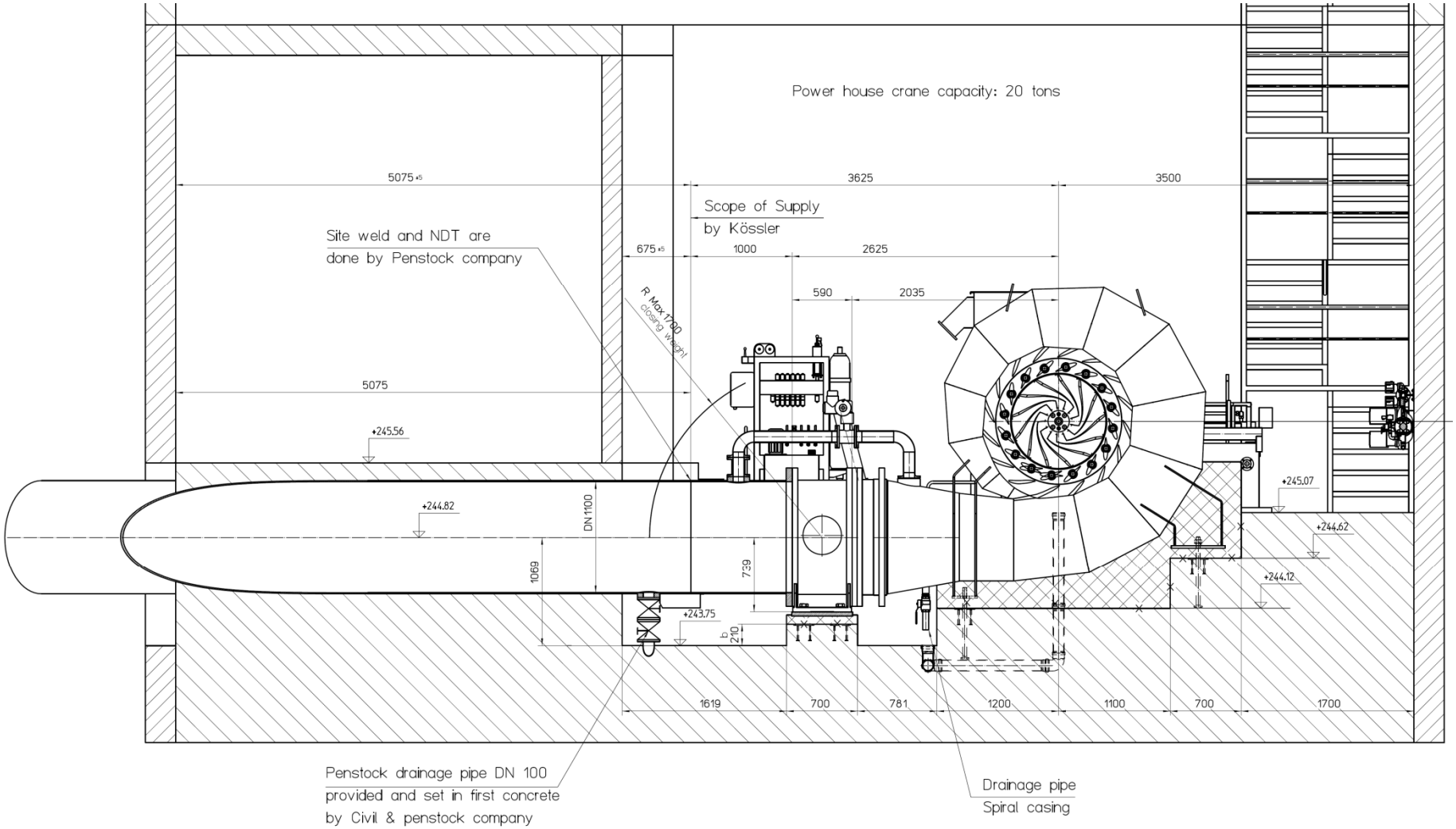

Francis turbines vertical – Illulisat

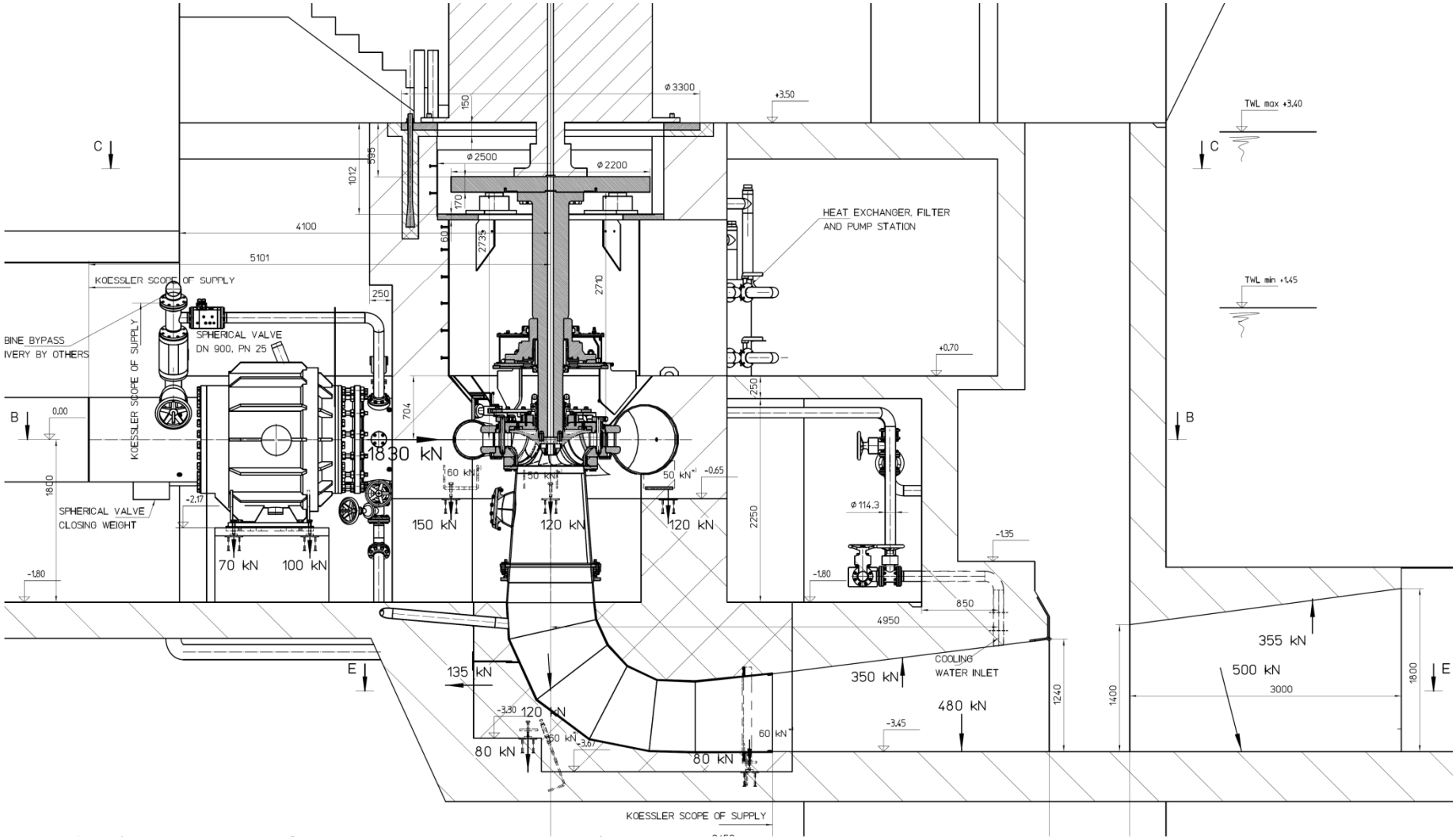

Kaplan turbines horizontal – Arjeplog

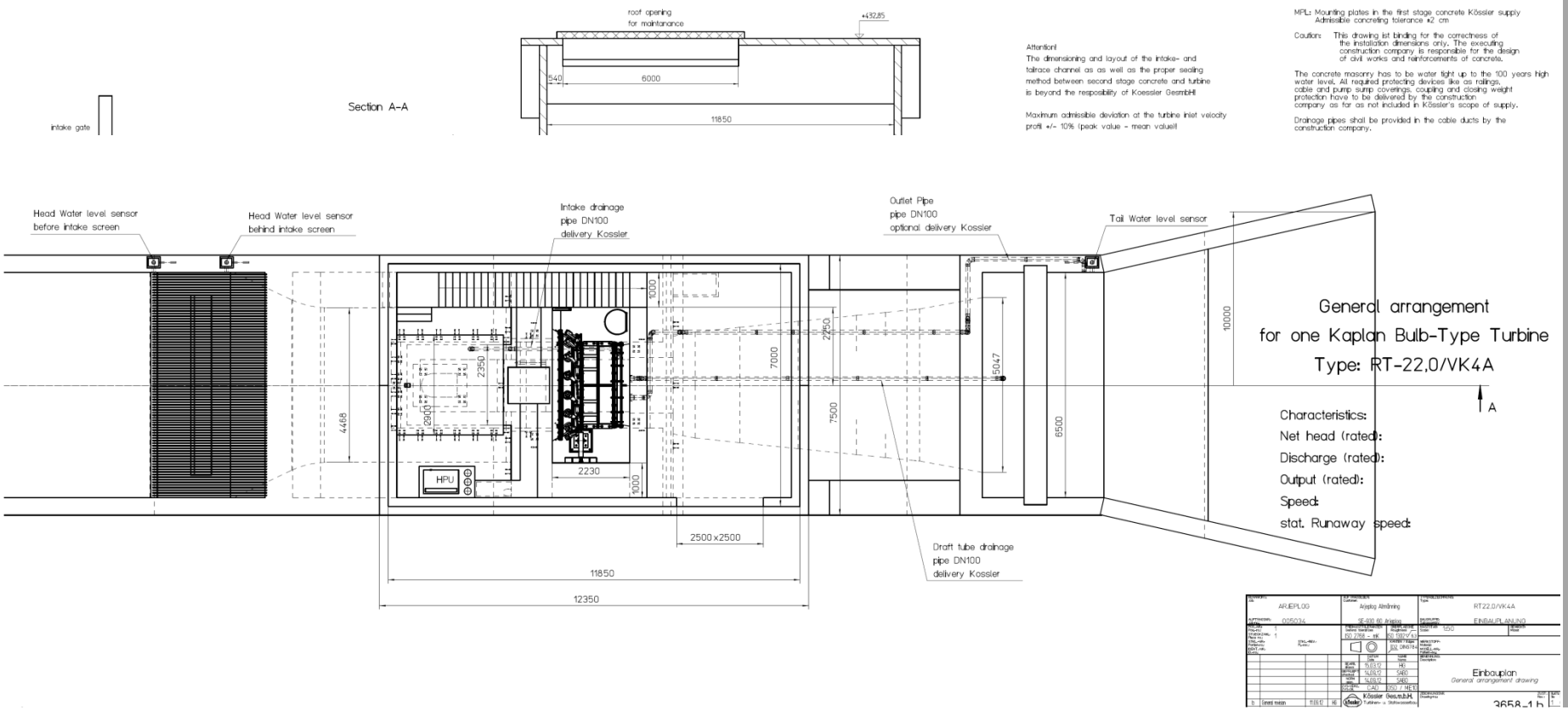

Kaplan turbines horizontal – Esslingen

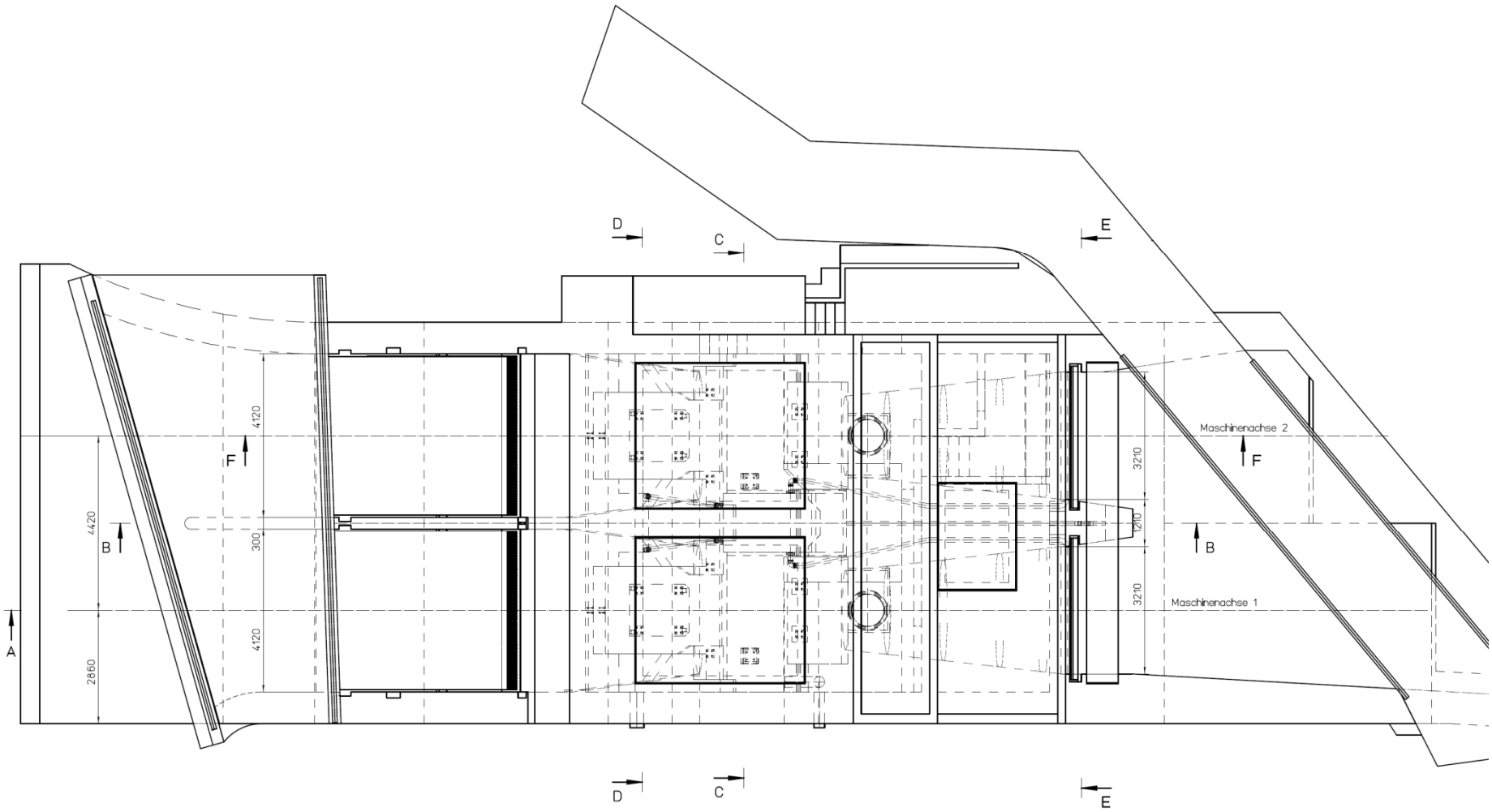

Kaplan turbines horizontal – Hiirikoski

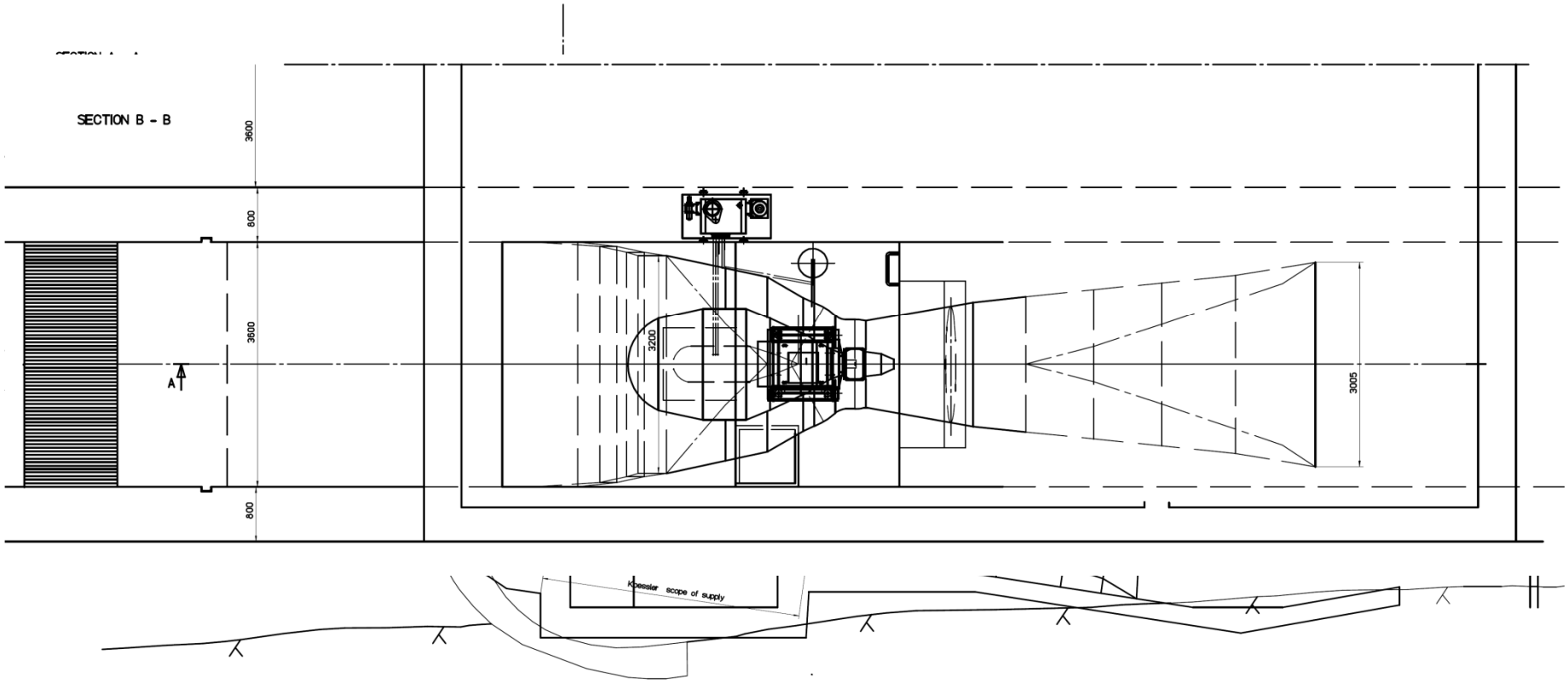

Kaplan turbines horizontal – Piparan

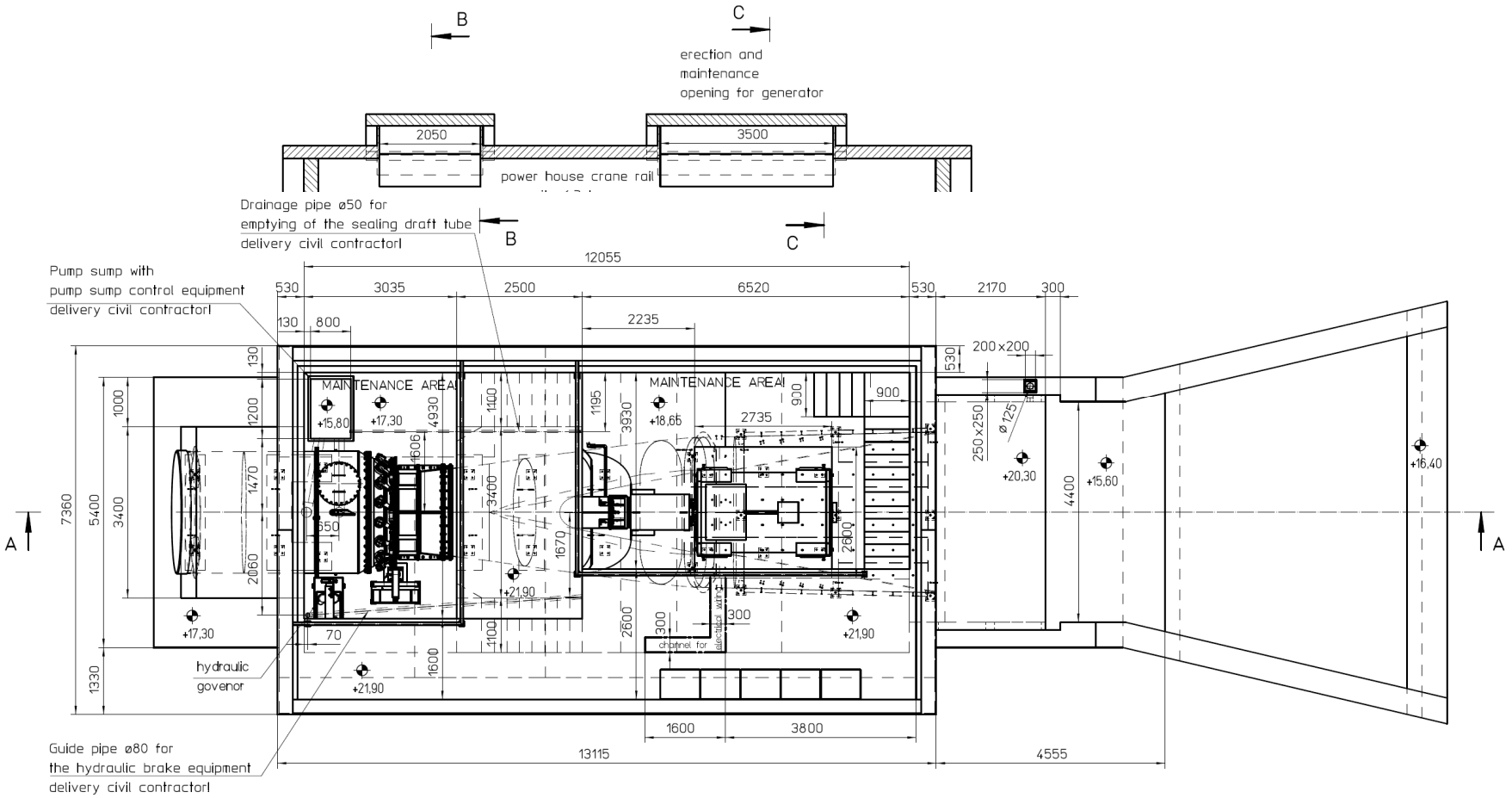

Kaplan turbines horizontal – Rendelstein

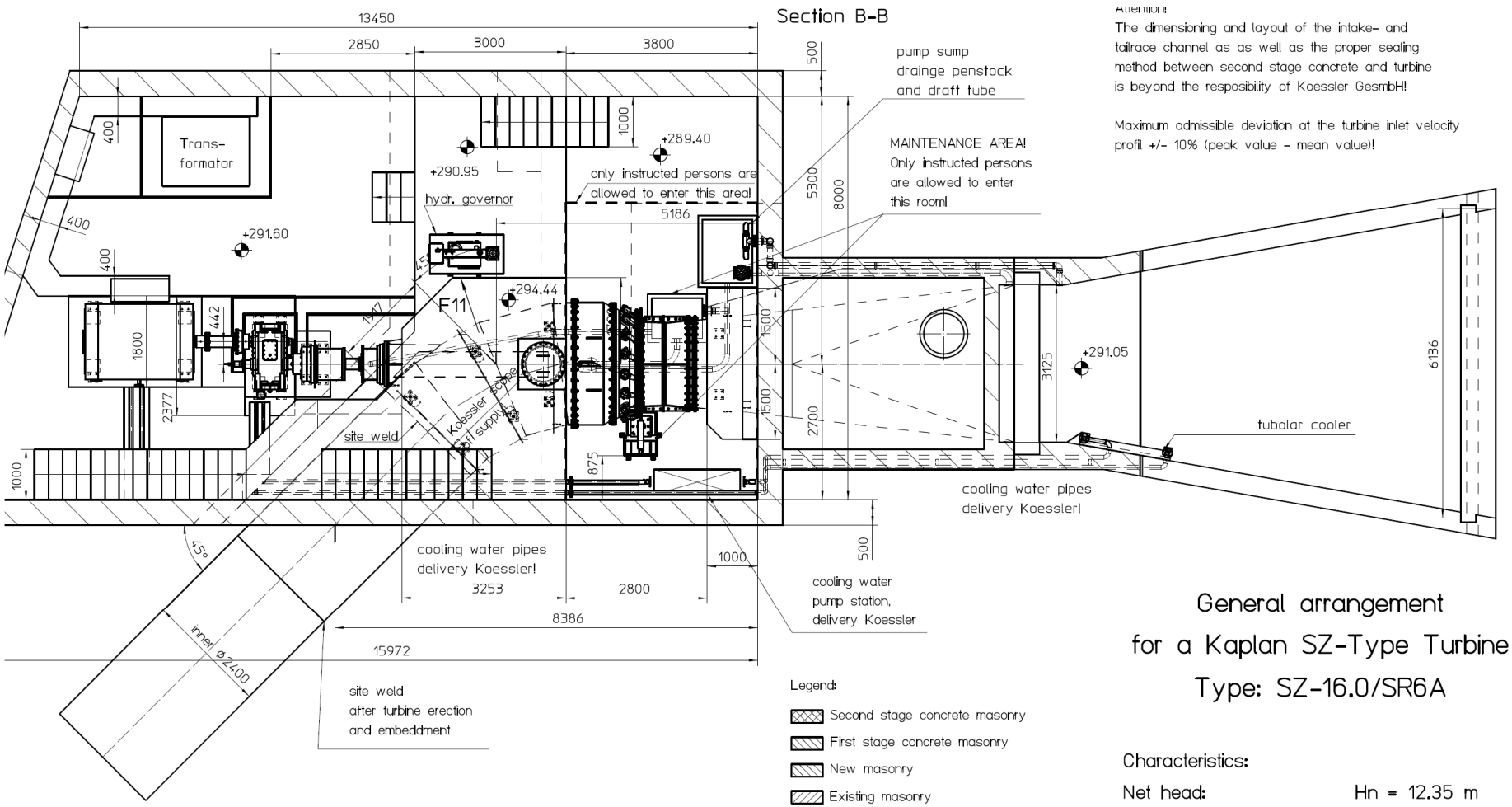

General arrangement
for a Kaplan SZ-Type Turbine
Type: SZ-16.0/SR6A

Characteristics:

Net head: Hn = 12.35 m

Kaplan turbines horizontal – Sarihidir

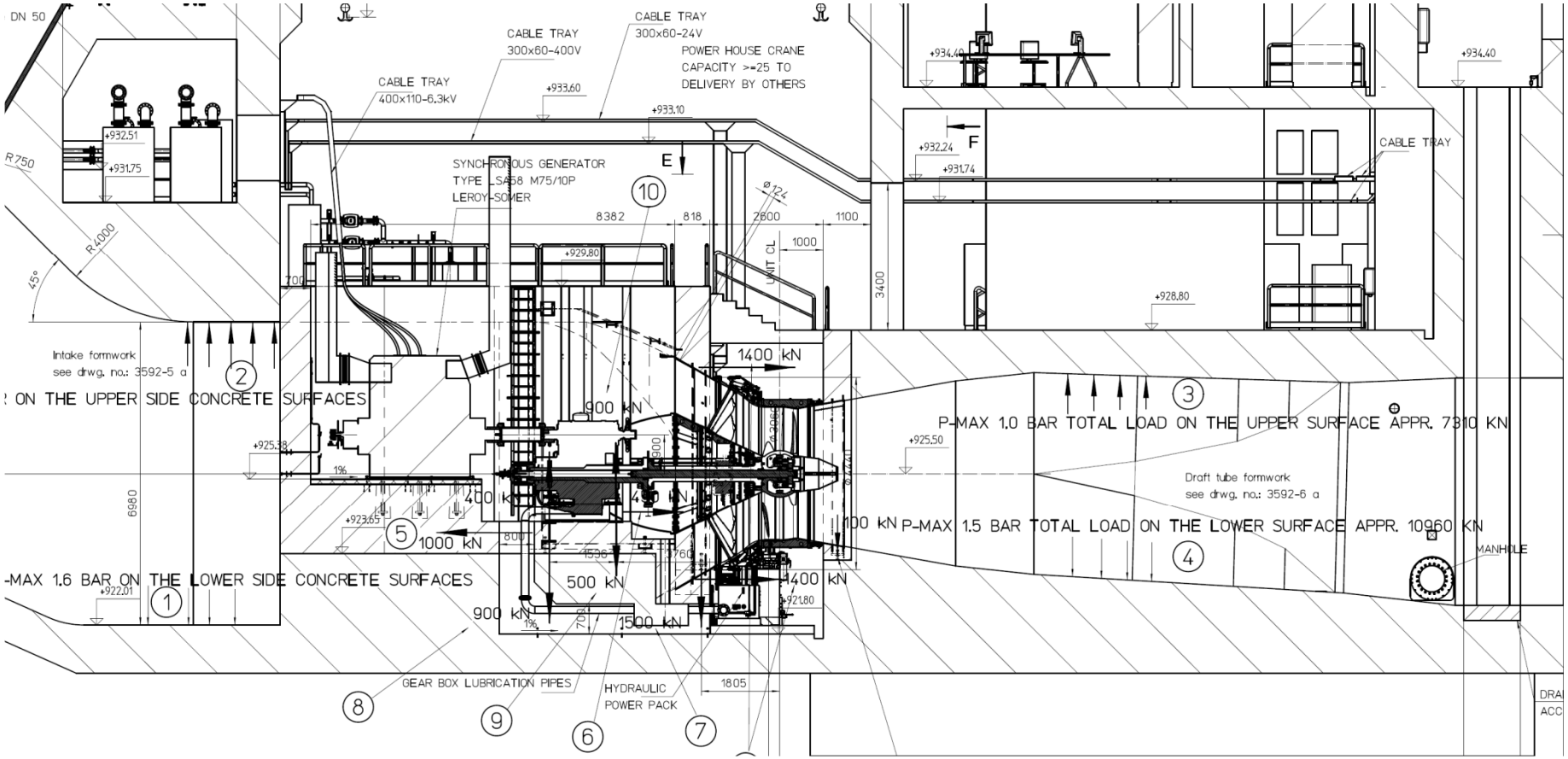

Kaplan turbines horizontal – Taipale StreamDiver

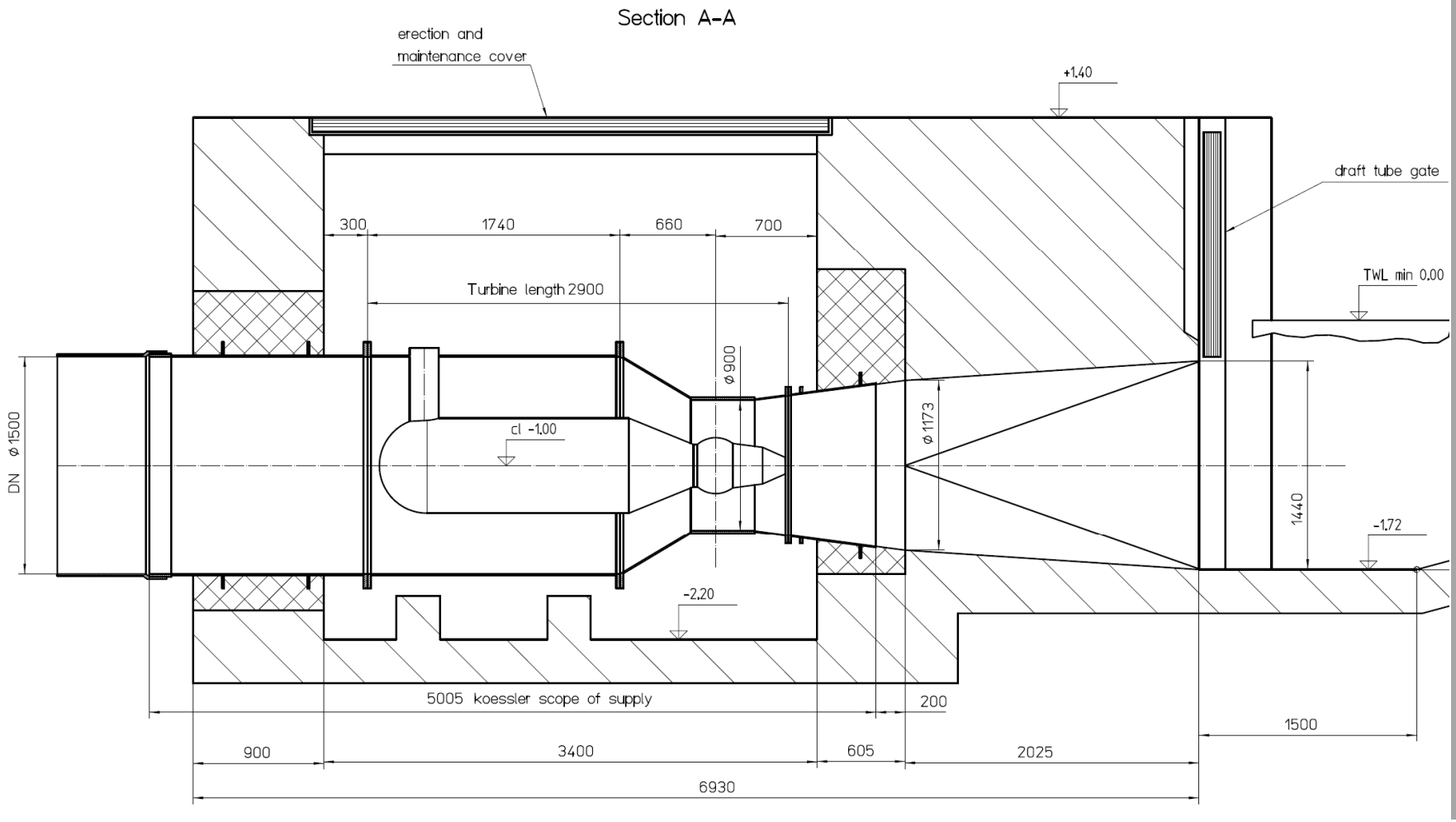

Kaplan turbines vertical – Neubruck

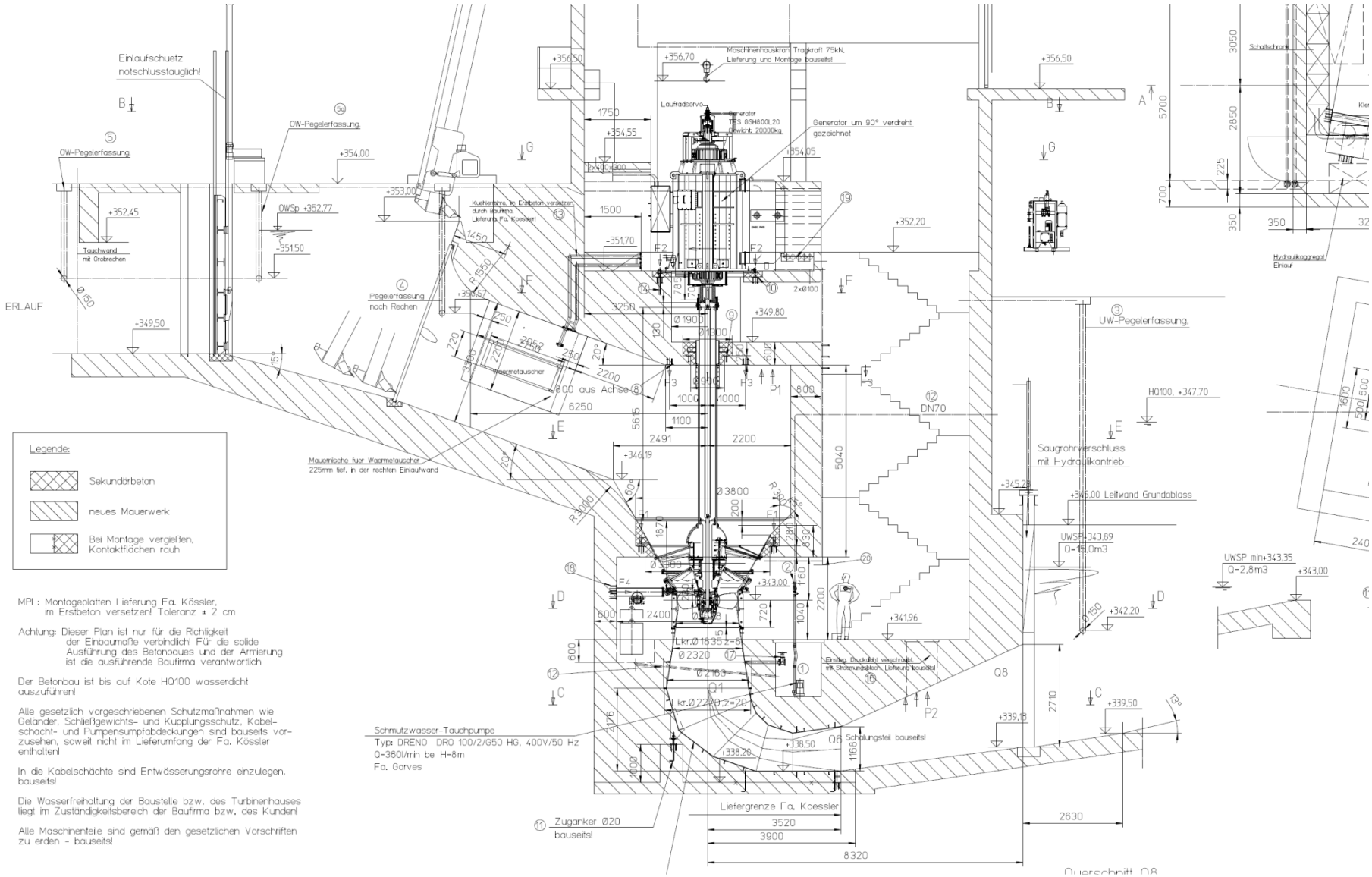

MPL: Montageplatten Lieferung Fa. Kössler,
im Erstbeton versetzen! Toleranz ± 2 cm

Achtung: Dieser Plan ist nur für die Richtigkeit der Einbaumaße verbindlich! Für die solide Ausführung des Betonbaues und der Armierung ist die ausführende Baufirma verantwortlich!

Der Betonbau ist bis auf Kote HQ100 wasserdicht auszuführen!

Alle gesetzlich vorgeschriebenen Schutzmaßnahmen wie Geländer, Schließgewichts- und Kupplungsschutz, Kabelschacht- und Pumpensumpfabdeckungen sind bauseits vorzusehen, soweit nicht im Lieferumfang der Fa. Kössler enthalten!

In die Kabelschächte sind Entwässerungsrohre einzulegen, bauseits!

Die Wasserfreihaltung der Baustelle bzw. des Turbinenhauses liegt im Zuständigkeitsbereich der Baufirma bzw. des Kunden!

Alle Maschinenteile sind gemäß den gesetzlichen Vorschriften zu erden – bauseits!

Kaplan turbines vertical – Pradella

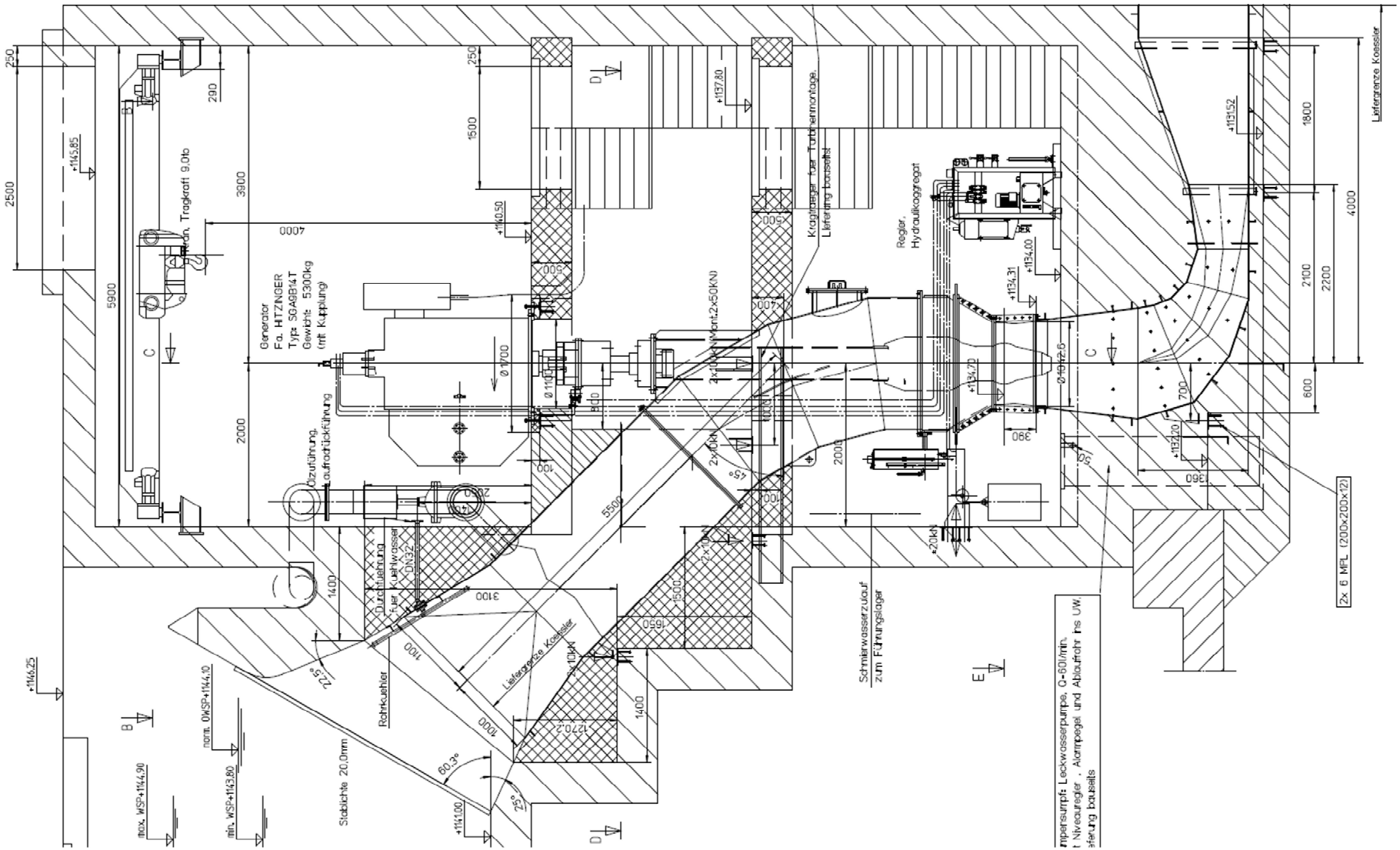

Kaplan turbines vertical – Randel

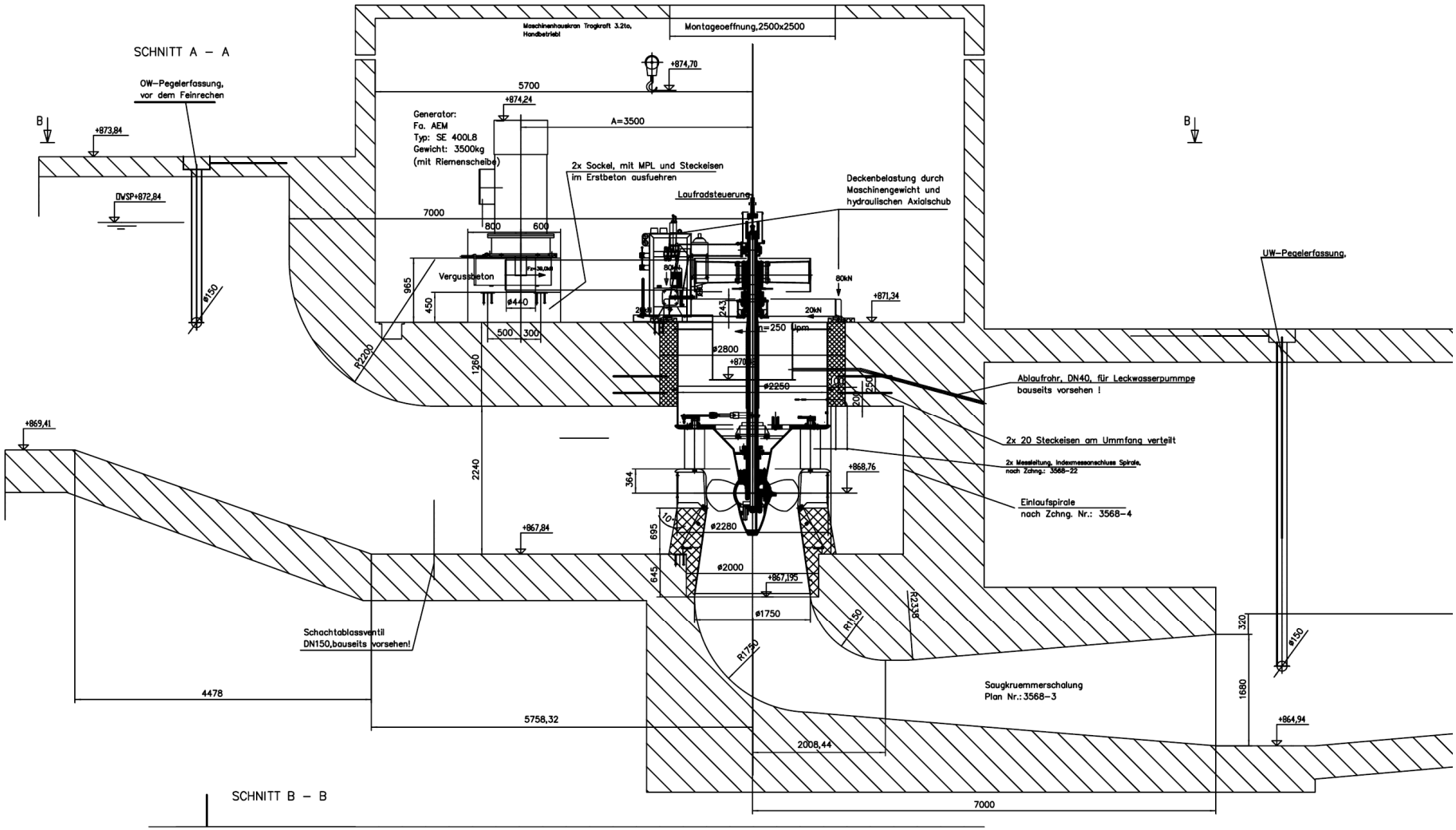

Kaplan turbines vertical – Tielsi Eco-Flow

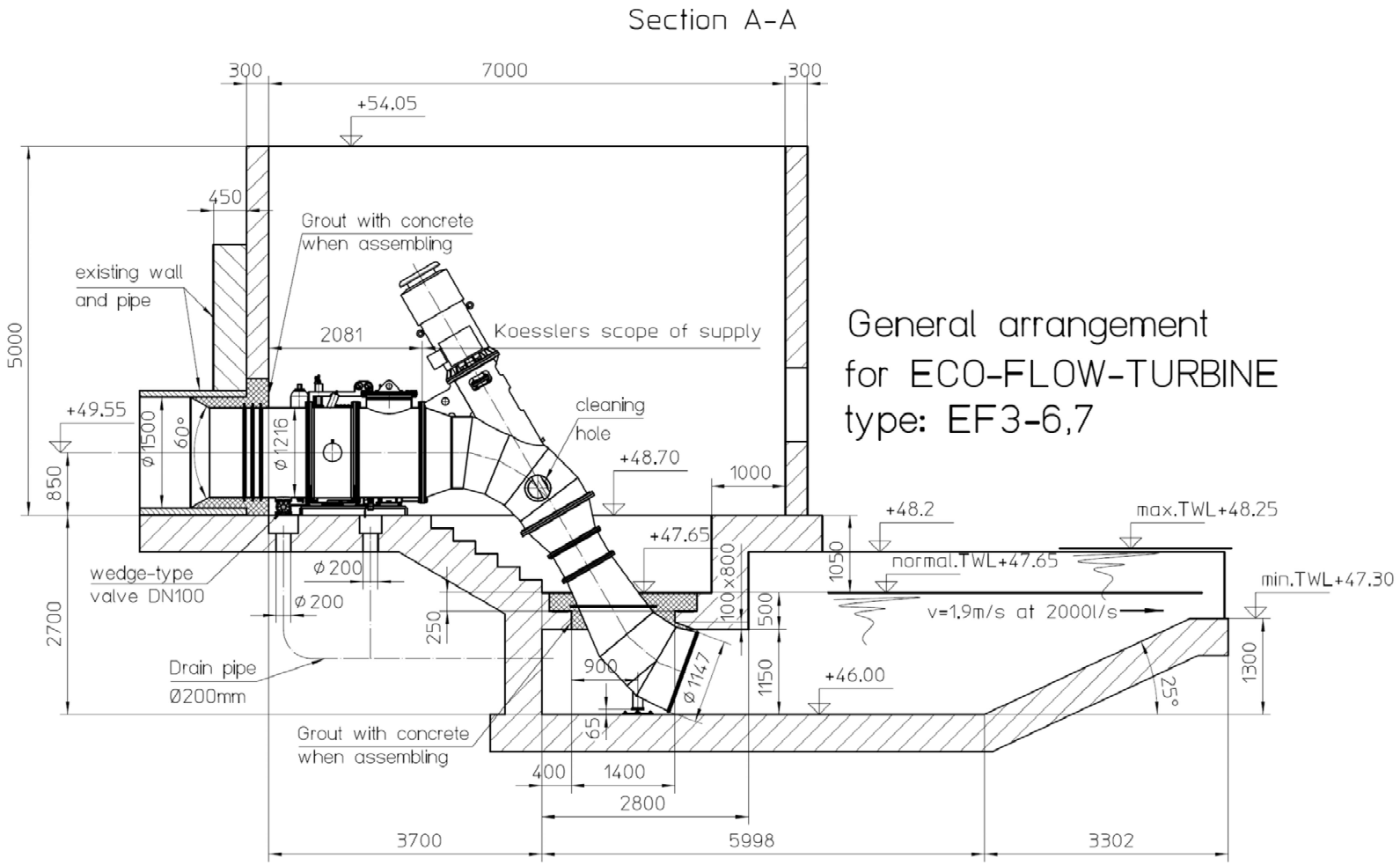

Kaplan turbines vertical – Verla 1

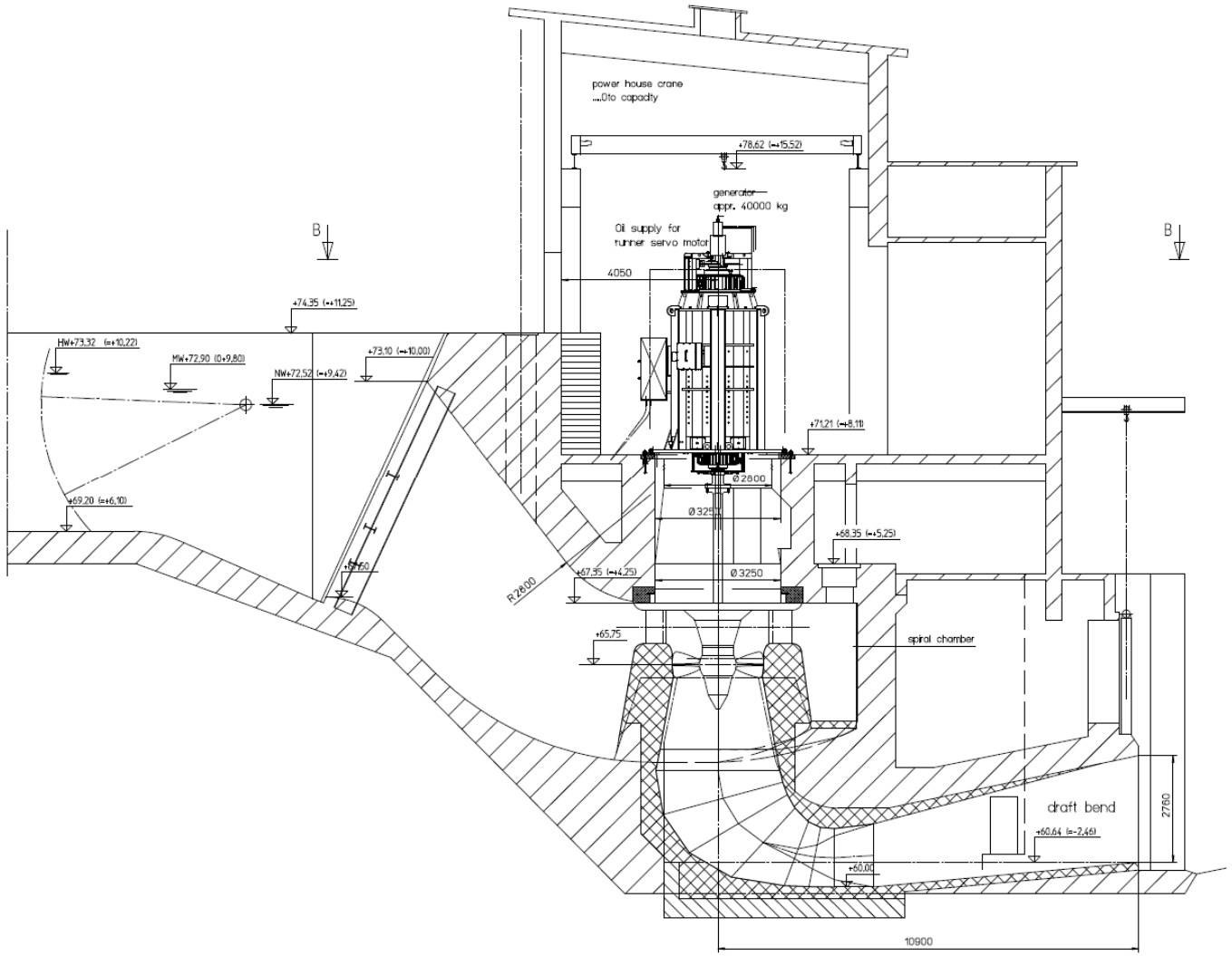

Pelton turbines 1 jet – Cakirman

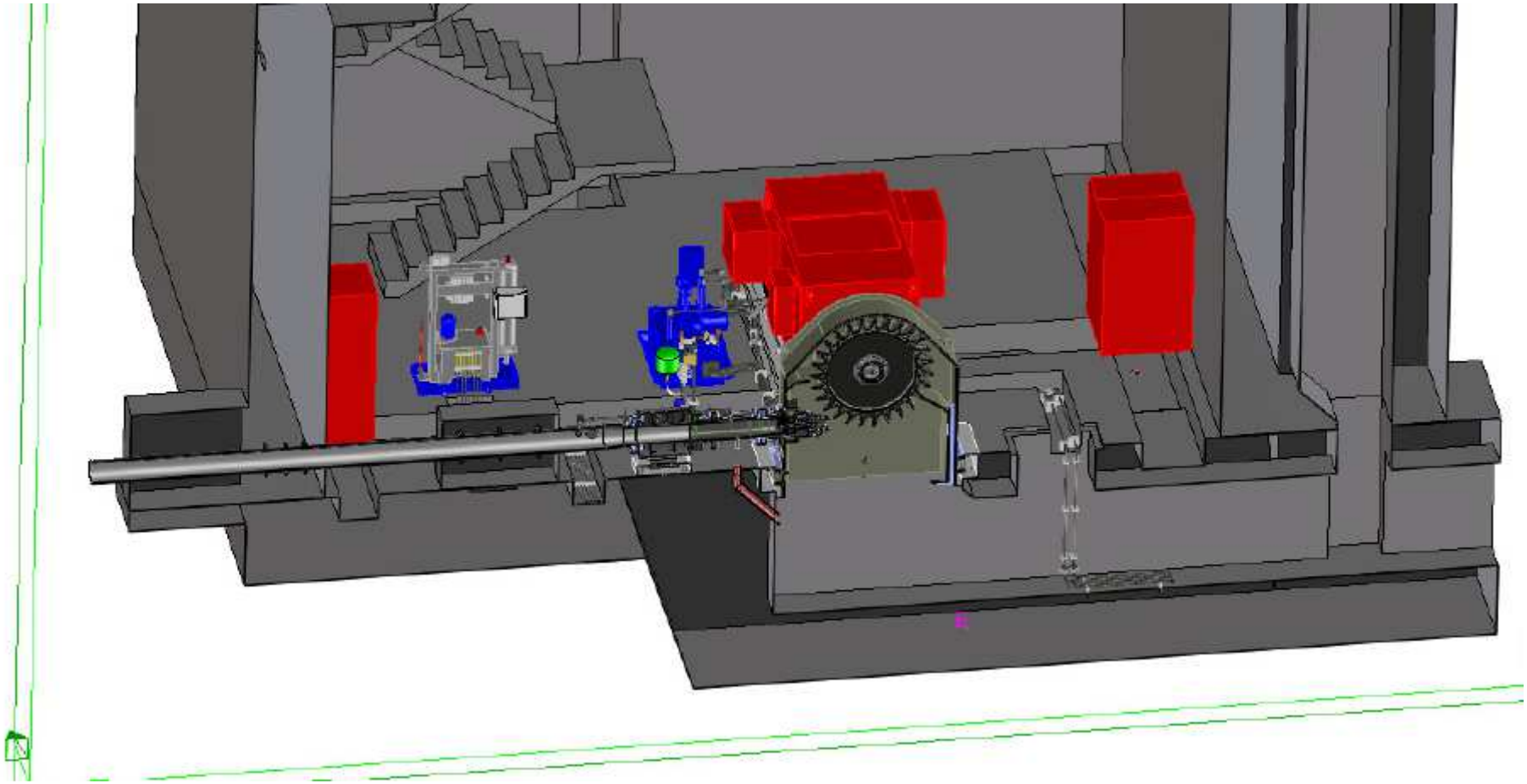

Pelton turbines 2 jets – Hidropantasma

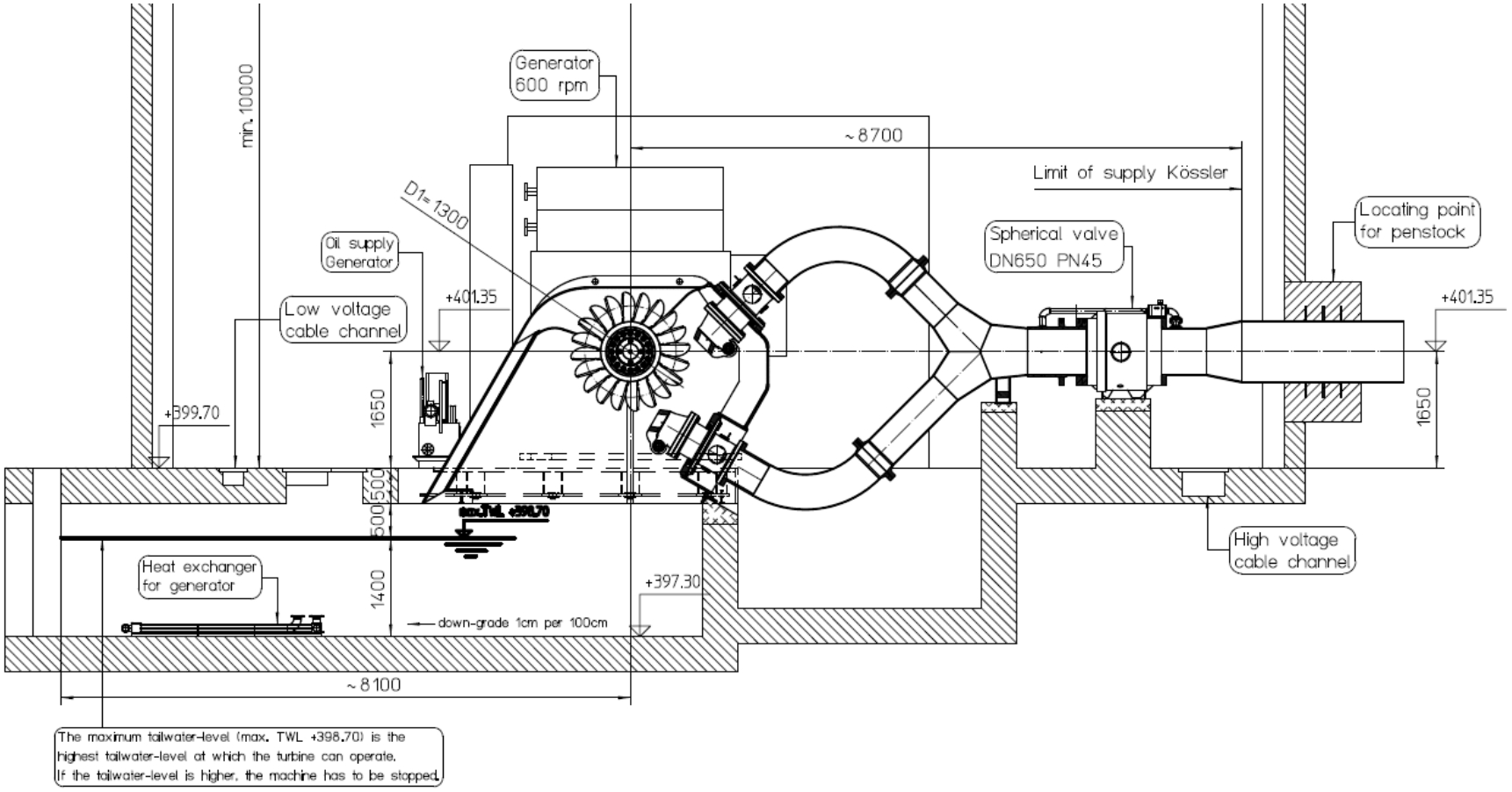

Pelton turbines 6 jets – Aksu

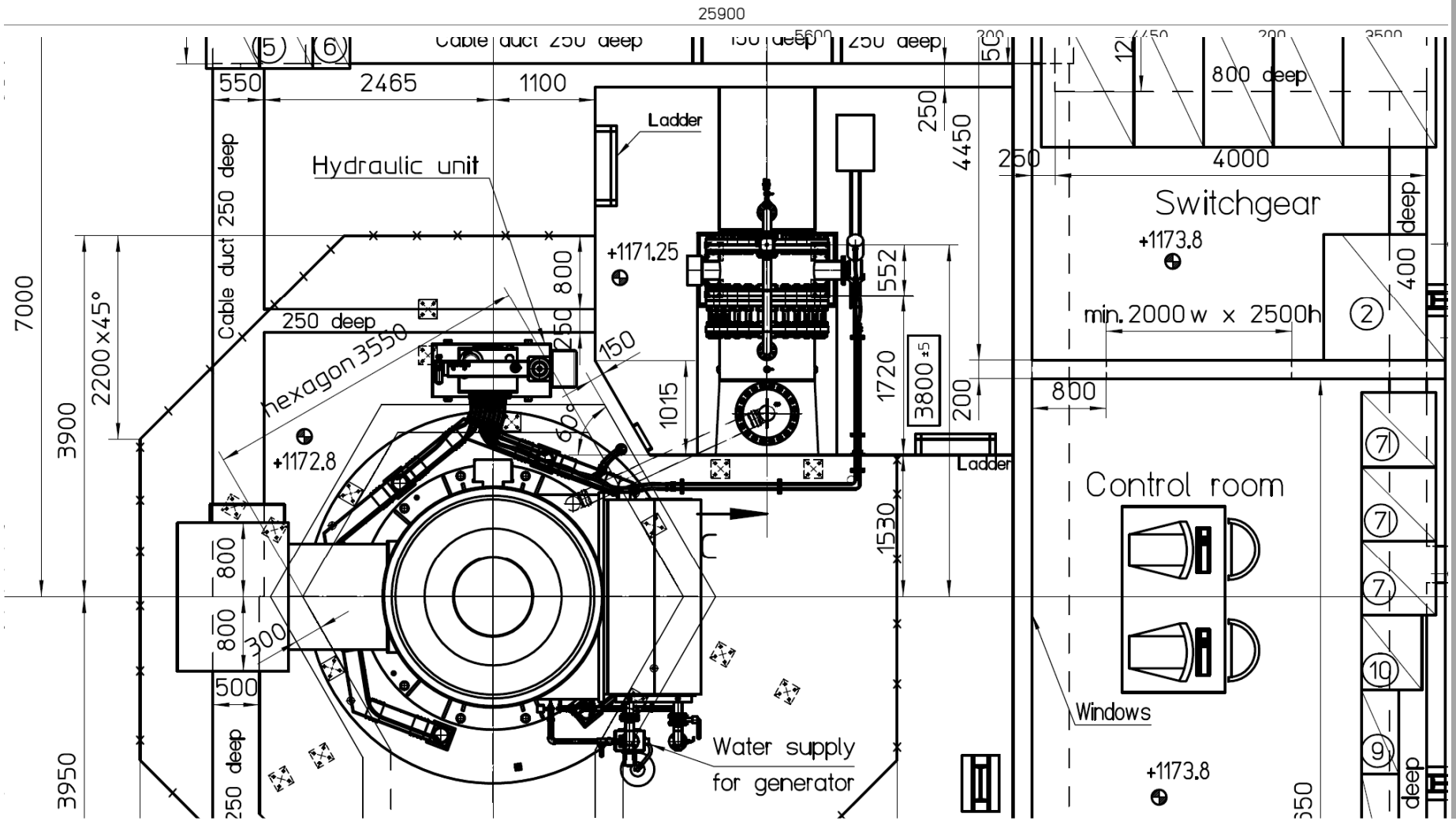

Setting Samples

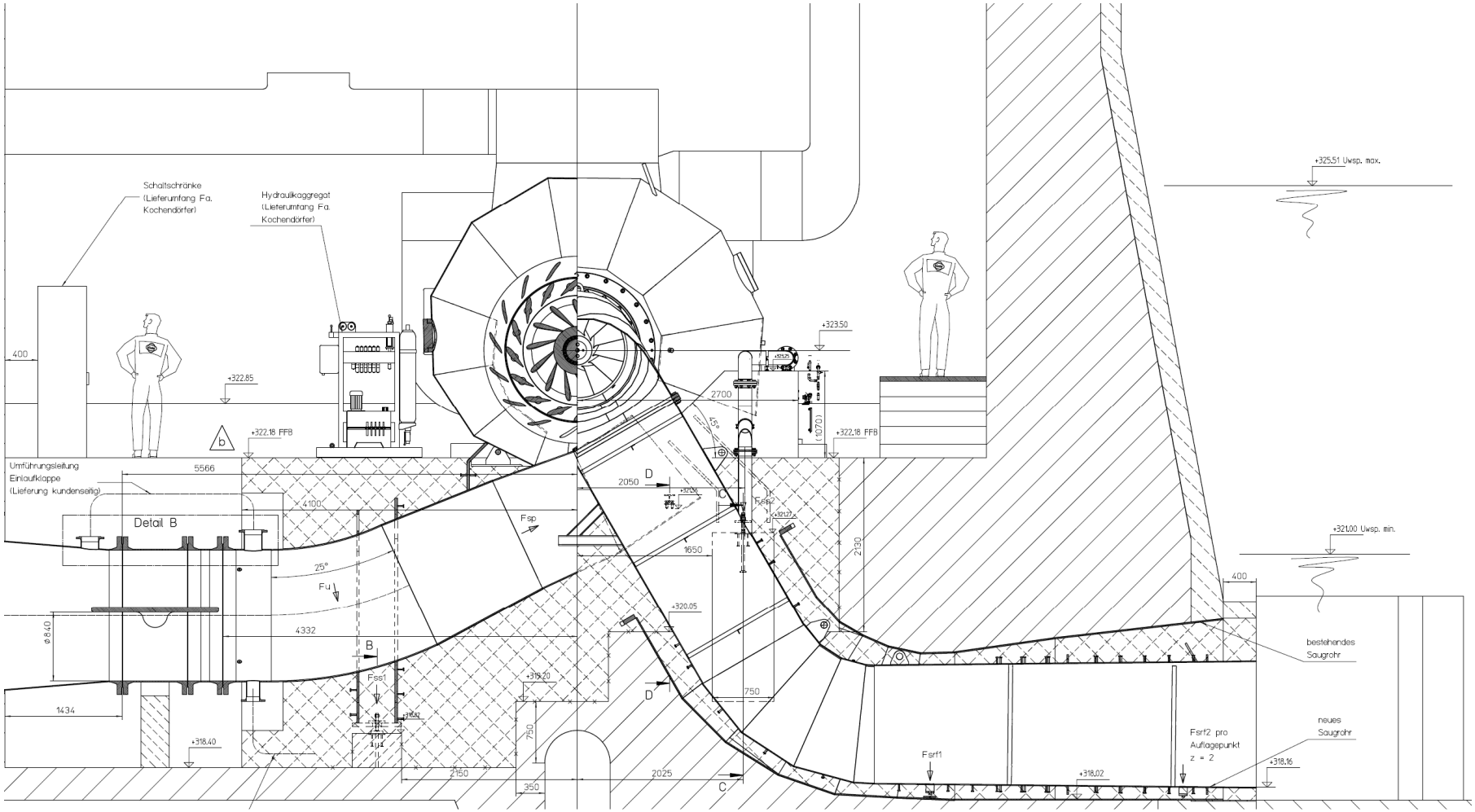

Cavitation – Impact

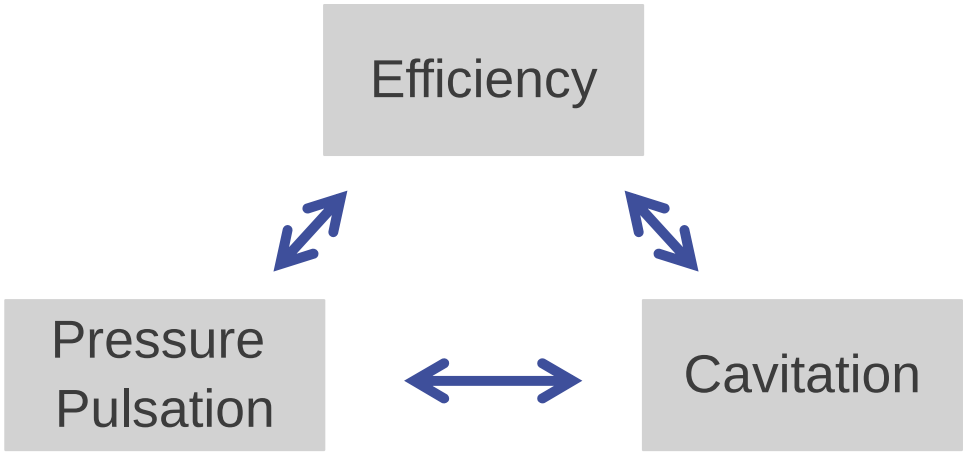

Cavitation – Thoma Value

Calculation of max. admissible suction head

HS = 10,34 – HB – HT – (Sigma x HN)
HS = theor. suction head (Cavitation Limit)
10,34 = Parametric pressure - constant
HB = Pressure reduction for Altitude (per 100 m value to be considered 0,12)
HT = Vaporisation pressure of water with +15℃ (value 0, 18)
HN = Net head

Sample:
HN = 5,10 m
Altitude = 530 m
σ = 1,2 (from Hill Chart)
HSmax. = 10,34 – (5,3*0,12) – 0,15 – (1,2*5,1) = 3,404 m

Cavitation – operation limits

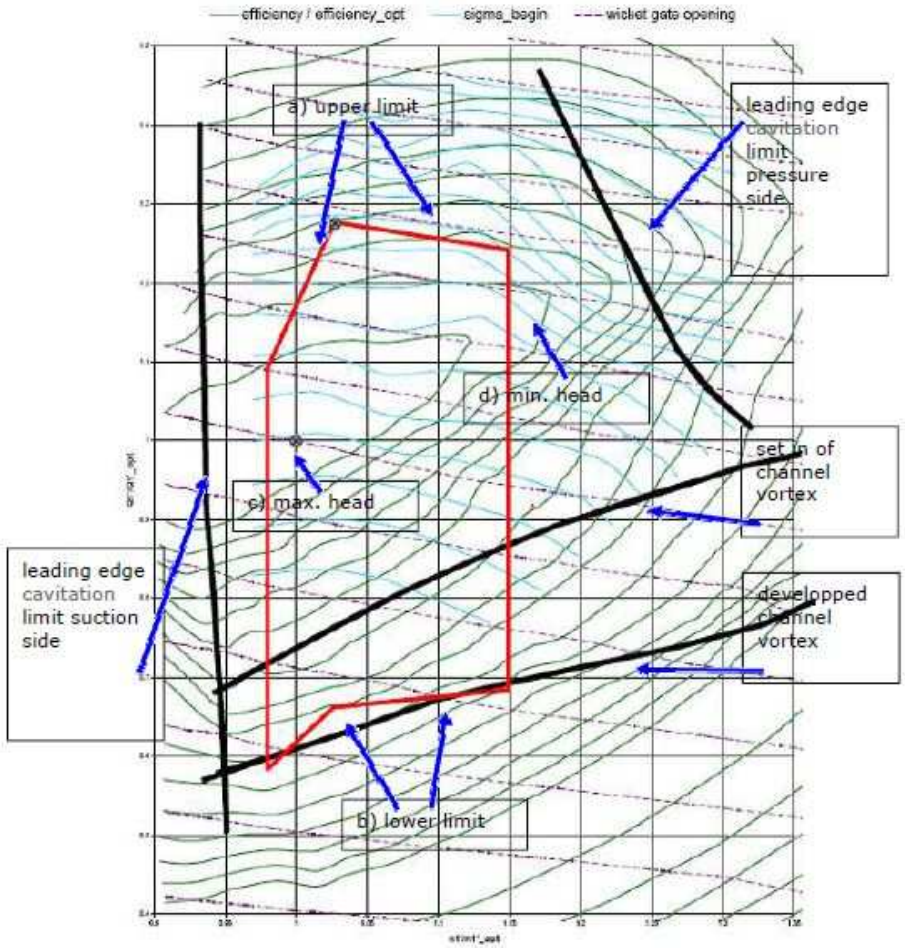

Cavitation – vaporisation bubbles

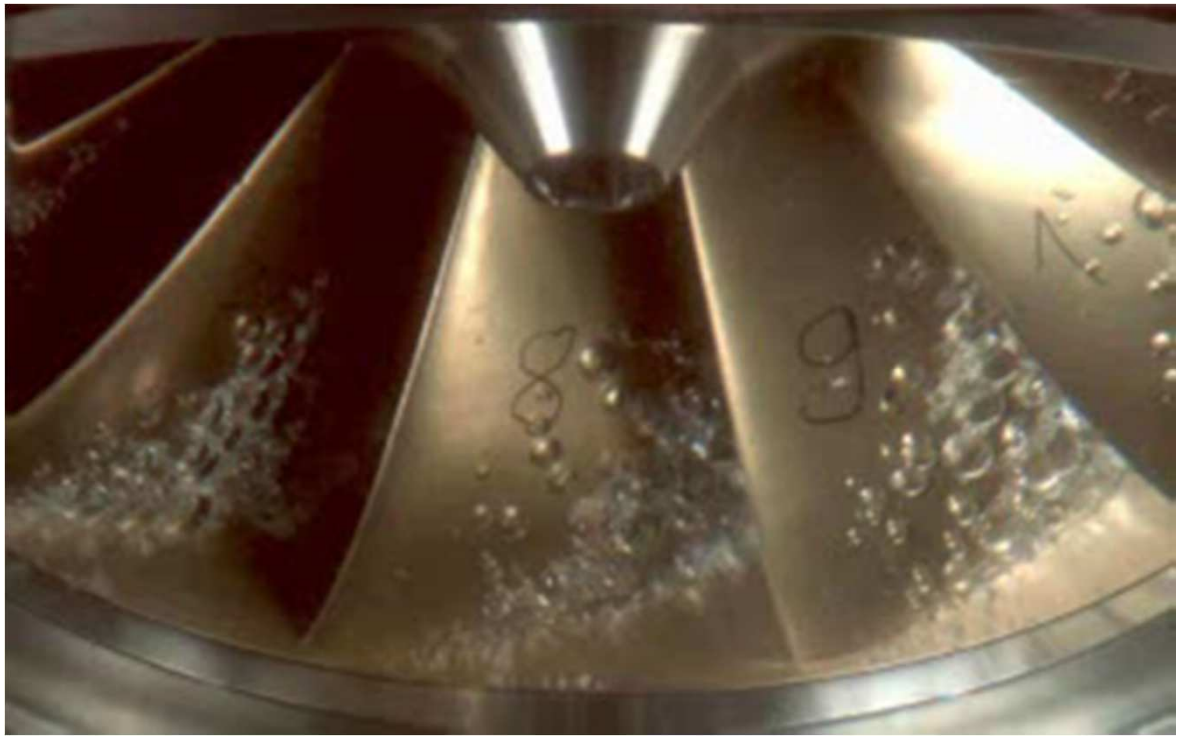

Cavitation - vortex



Water Hammer –
Pressure Profile with low inertia

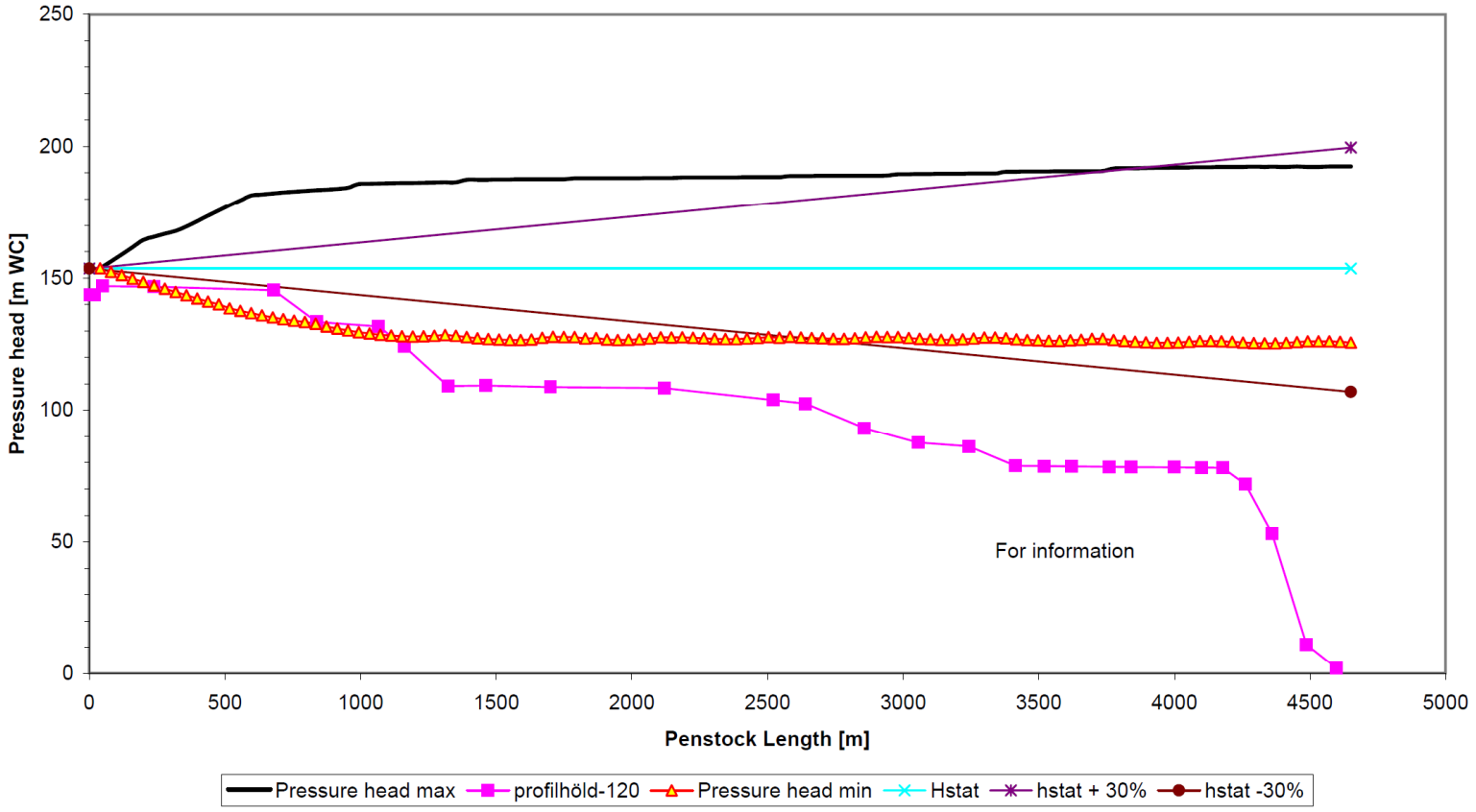

Water Hammer –
Pressure Profile with high inertia

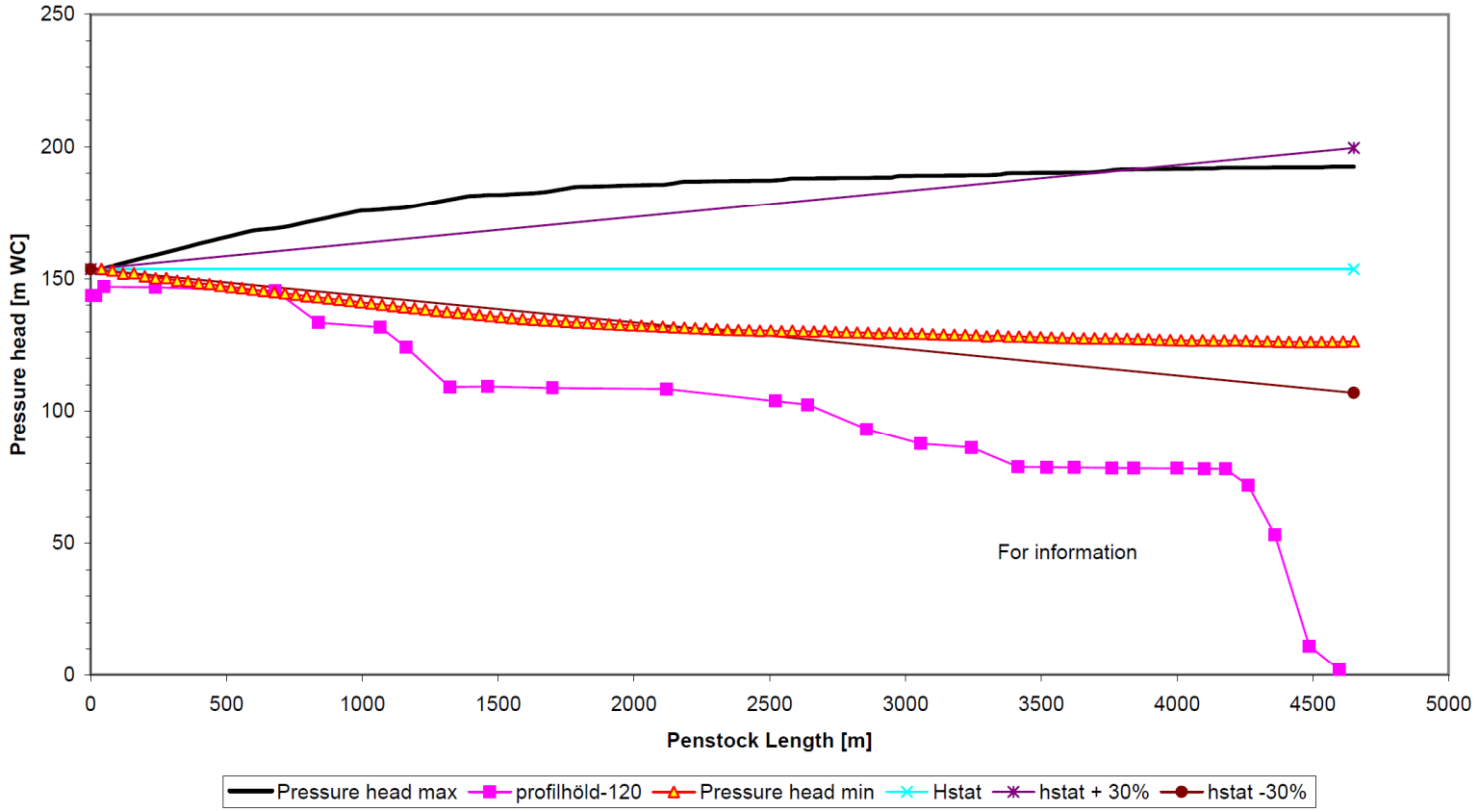

Turbine Layout Sample

RT Auslegung

Chapter 4 – Hydraulic Governor



Hydraulic Governor

Sample Hydraulic Scheme

Chapter 5 –
Transient Conditions



Transient Conditions

Extract Transient Condition Calculation

Chapter 6 – Engineering Tools



Layout Data Sheets

- Project Data Sheet
- Operating Hill Chart
- Efficiency Curve
- Cavitation Guarantee
- Inlet-Conditions
- Neatlines versus Project Drawing

Cavitation – operation limits

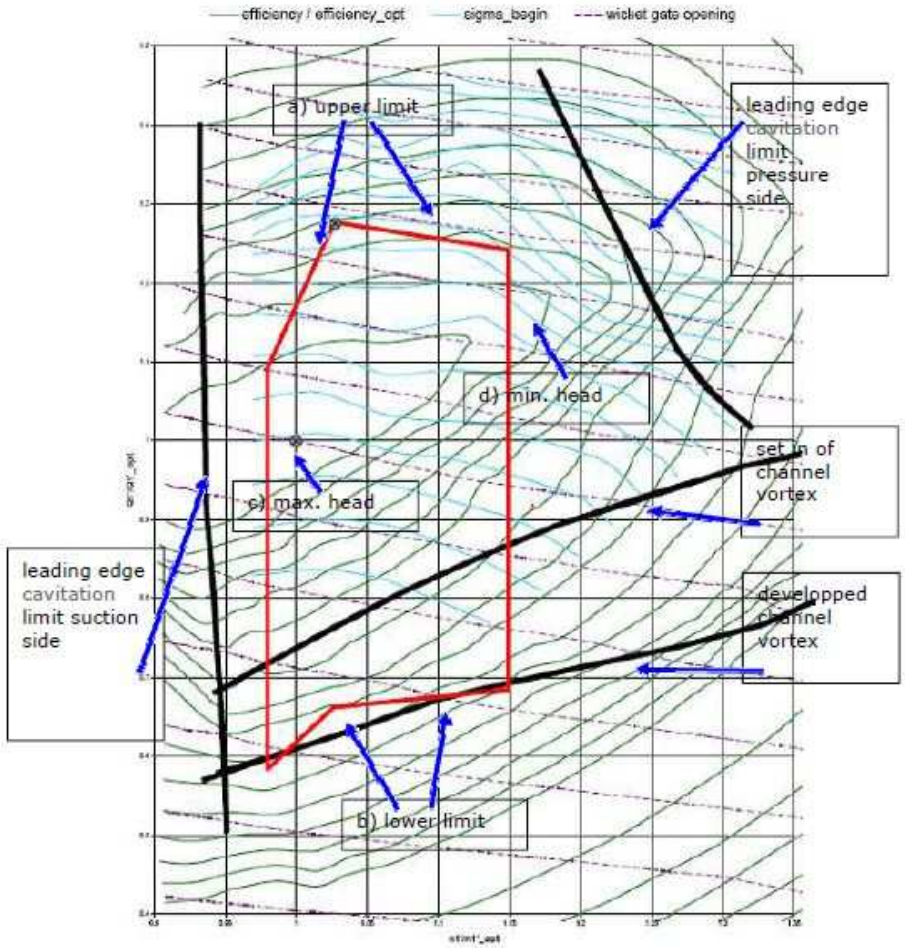

CFD Analysis

CFD Analysis Report

Transposed MTR

Results Transposed MTR

Finite Elements Calculation

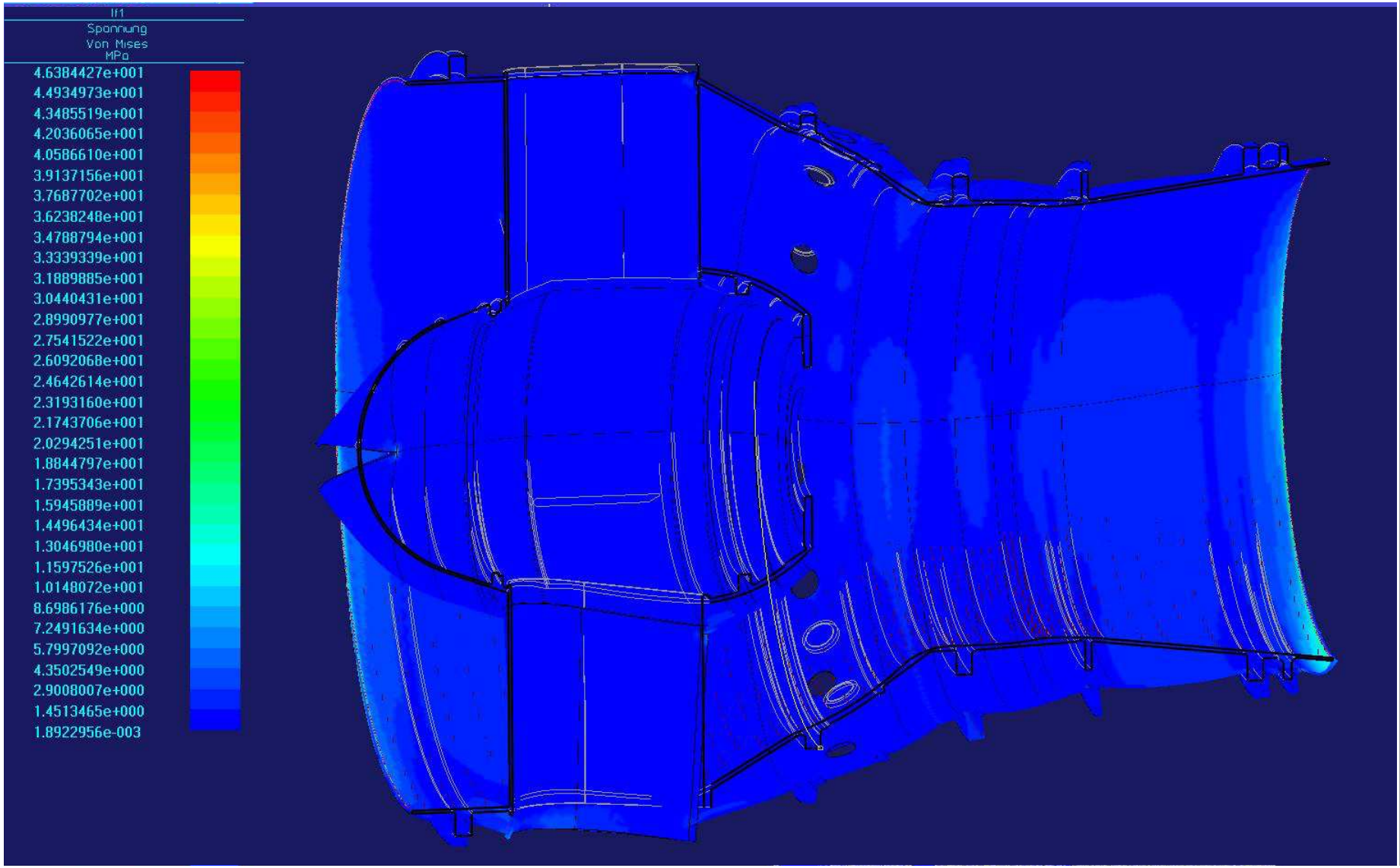

Chapter 7 – Engineering Choices



Design Samples – Francis

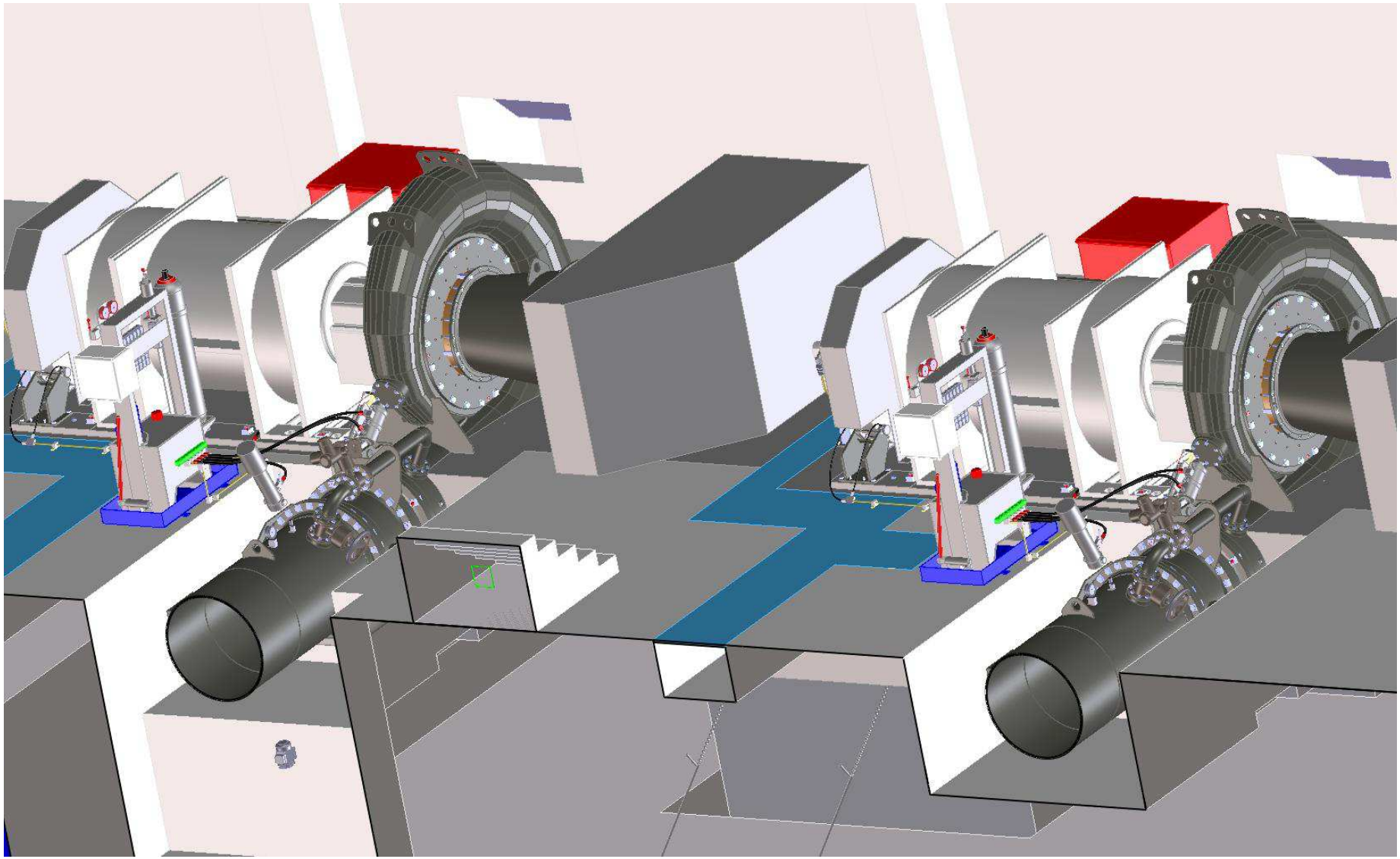

Design Samples – Kaplan

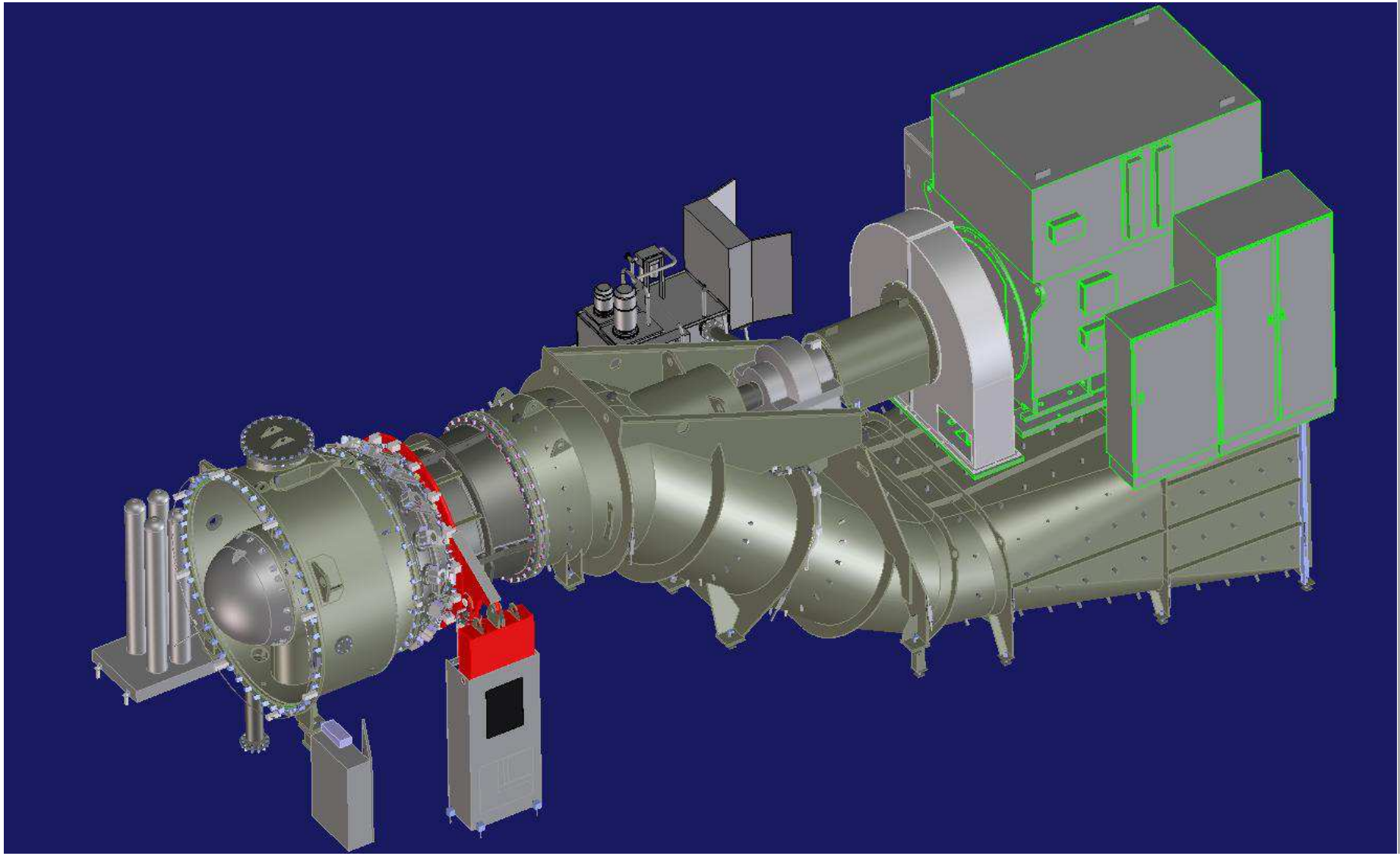

Design Samples – Pelton

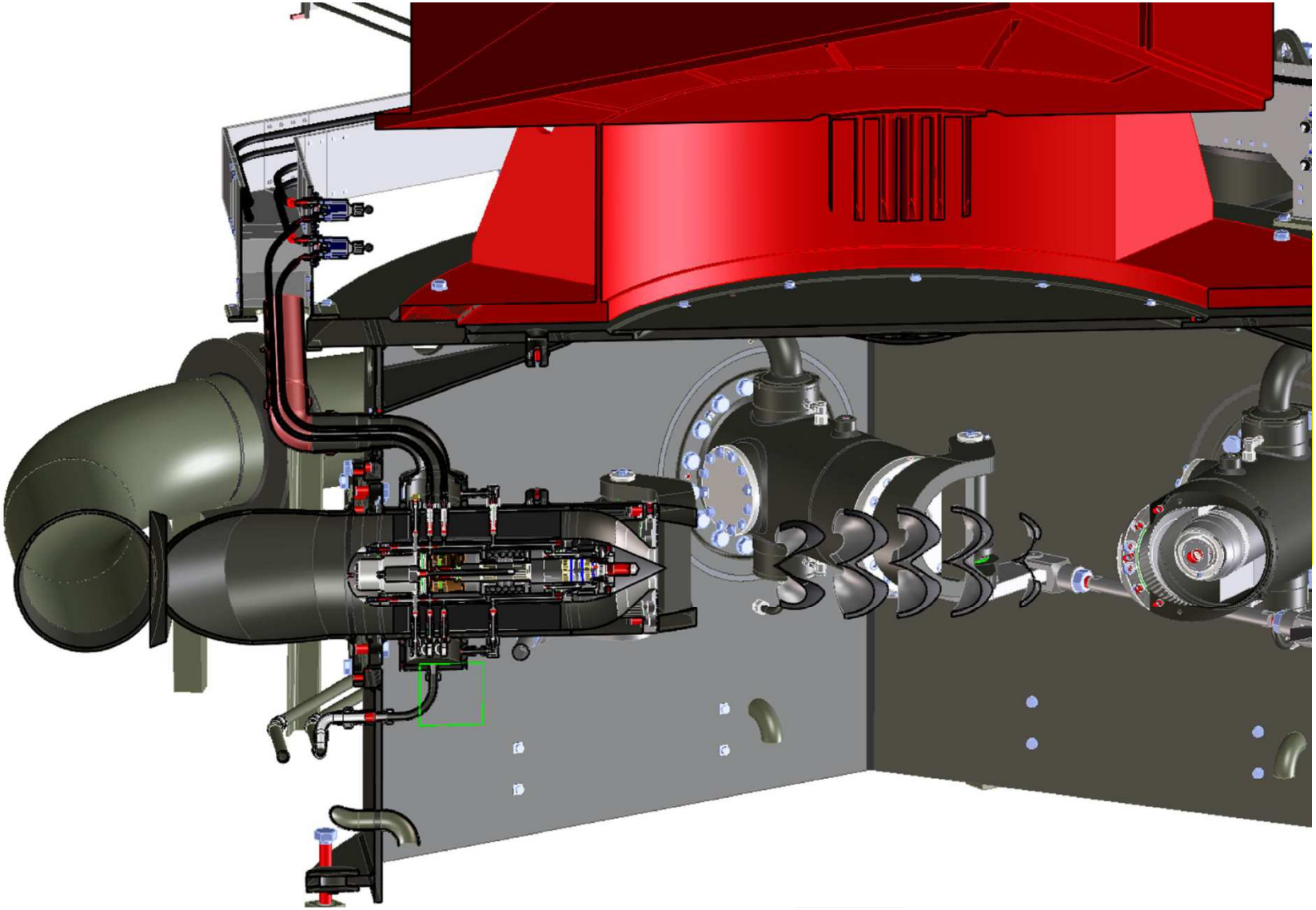

Material Selection

Francis

Kaplan

Pelton

Chapter 8 – Mechanically and Electrically Protections



El. Instrumentation System

1. Position transducers wicket gate mechanism
2. Position transducers wicket runner blades
3. Speed transducer(s)
4. Temperature indicators (PT 100)
5. Shock impulse indicators (SPM)
6. Vibration control sensors
7. WGM distortion control device

Mechanically System(s)

1. Counter weight
2. Fly wheel
3. By-pass valve
4. Flow control valve (hydraulically)
5. Mech./ hydr. overspeed guard

Chapter 9 – Performance Verification



Laboratory Tests

Laboratory Tests

Field Tests

- Index Test
- Ultrasonic Method
- Current Meter Method
- Thermodynamic Method
- Samples Test Reports

Samples Test Reports

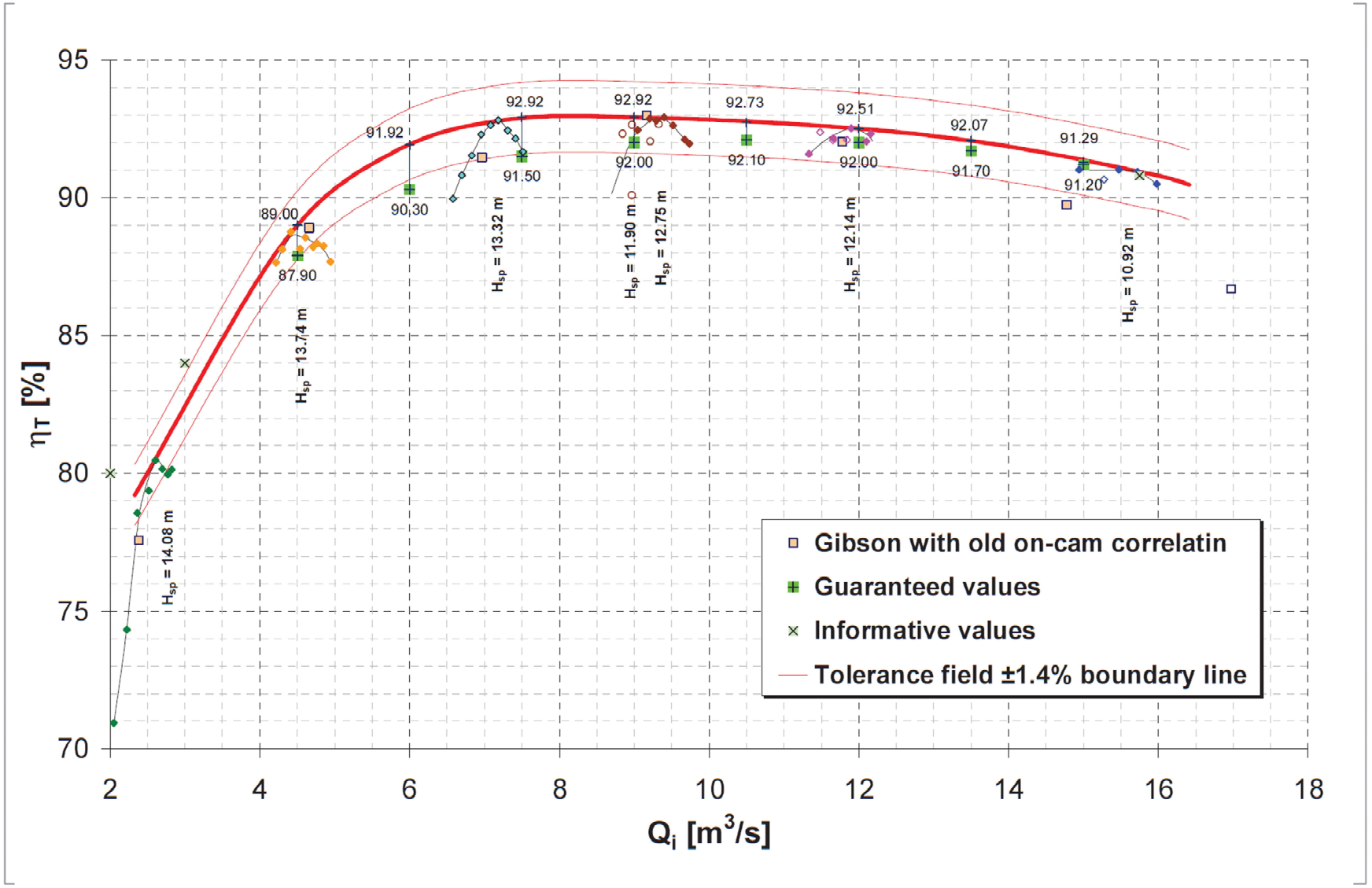

Chapter 10 – Performance Figures



Performance Figures

Kaplan: Efficiencies up to 94 %

Francis: Efficiencies up to 94 %

Pelton: Efficiencies up to 92 %

Intake and Outlet Losses

Chapter 11 – Manufacturing Process



Manufacturing Process

Sample Manufacturing Schedule

Chapter 12 – Product Portfolio



Product Portfolio

Francis

Kaplan

Pelton

Chapter 13 –
Selection of Partners and Suppliers



Generators

AEM	Germany
Cummins Generator Technology (AvK)	Germany
Hitzinger	Austria
Indar	Spain
Koncar	Croatia
Leroy Somer	France
Lloyd Dynamo Werke (LDW)	Germany
Siemens-Schorch	Germany
TES	Czech Republic
Voith – TDPS	India
Further contacts with	
Dolmel	Poland
Gamesa	Spain
Marelli	Italy

Hydraulic Power Units

Bibus	Austria
Bosch-Rexroth	Austria
Dorninger	Austria
Kochendörfer	Germany

Valves

Erhard	Germany
Gur	Austria
TB-Hydro	Poland
VAG	Germany

Electrical Equipment and Control Systems

ABB	Finland and Denmark
Dynelec	France
Kössler (dig. Governors only)	Austria
Schubert Elektroanlagen	Austria
Siemens	Turkey, Greece, Bulgaria

Thank you for your attention!

Questions ?



Kontakt:
Kössler GmbH & Co KG
Wasserkraftanlagen
St. Georgener Hauptstraße 122
3151 St. Georgen am Steinfeld
Tel.: +43/2742/885272
e-mail: office@koessler.com


KÖSSLER