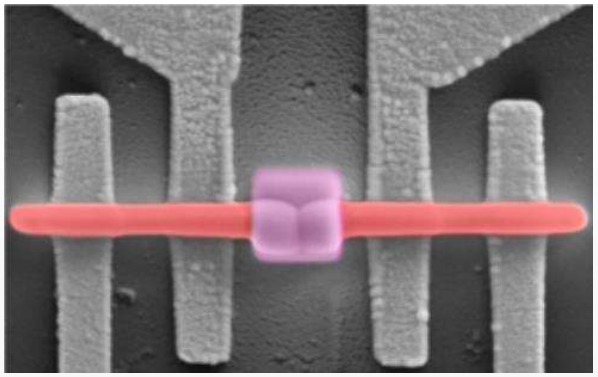

Quantizing the capacitor

Nobel Prize Lecture 2025



From classical circuits to quantum leaps

By: Per Sundqvist

VBIK Klubbmöte #14, November, 2025-11-26

Agenda

- Personal presentation
- Summary of Nobel prize. From 1962-2025
- Background
  - The capacitor, voltage and energy
  - Quantum physics, Bohr atom and radiation, spectra
  - Super conductivity, Meissner, Cooper pairs, London, phase, coherence
- The SIS-junction theory, Josephsson
- Quantization theory of mesoscopic structure,
  - The capacitor quantization, charge (x), phase (ϕ), capacitance (m)
  - Quantum states resonant tunnelling vs current, voltage spikes, charge hopping,
- Measurements
  - MW-Radiation
  - Resonant tunneling via dc-bias, radiation and reading voltage spikes
- Usage: Quantum computers
  - Cold war of today, China-France-USA, IBM, HP…
  - Qubits: the SIS (and other like spin), decoherence time, read, write, superposition
  - (Exampel of encryptation algorithm BB84 (Alice, Bob and Ewe)
- Questions

Personal

Doktorandstudier och nanofysik

Forskning inom kvantstrukturer och spin vid Chalmers, inklusive utveckling av en S-I-N infraröd detektor för rymdstationen ISS.

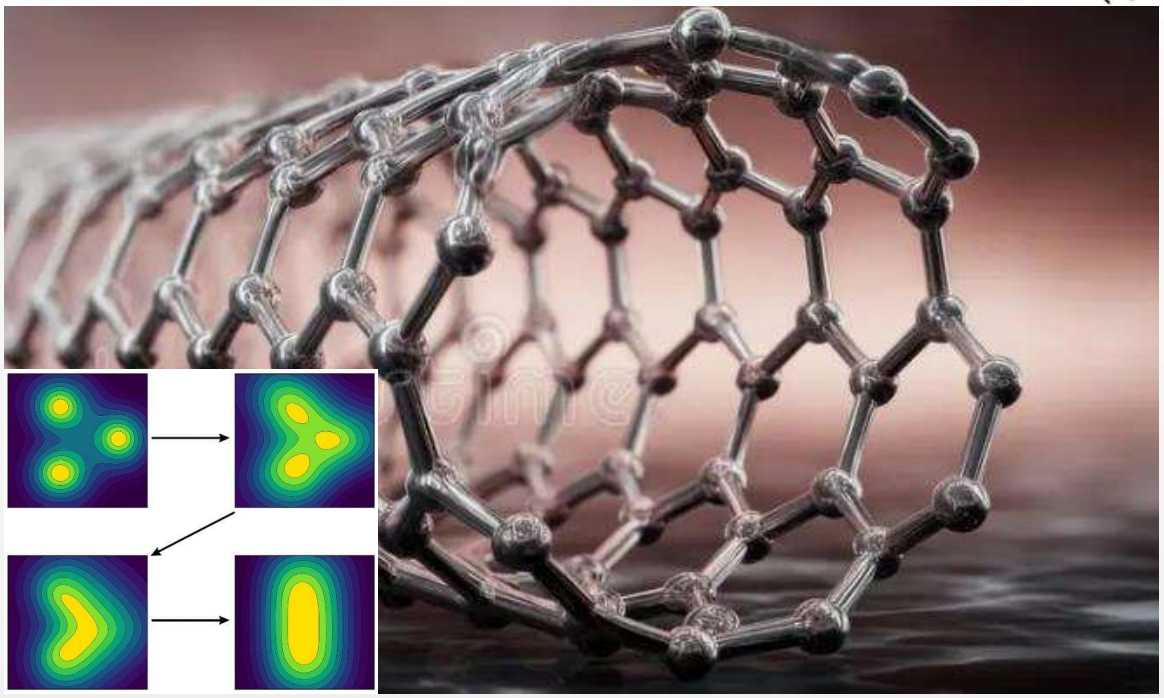

Postdoktoral forskning i Madrid

Fördjupad studie av elektronstruktur och fononer i kolnanorör med avancerade materialvetenskapliga simuleringar.

Industriell expertis på Hitachi

Specialist 2009-2025,R&D, Utveckling, testing och optimering och införande av PE i lindningskopplare för kraftöverföring.

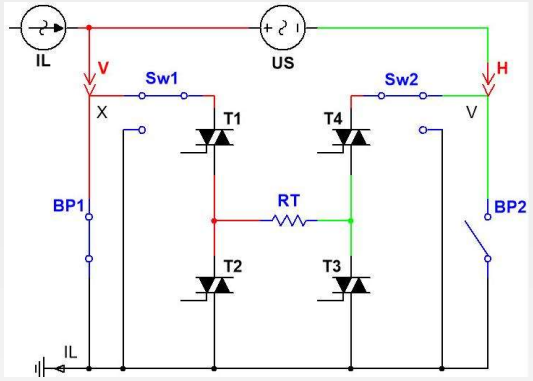



Nobel Prize summary

Josephson Effect & Nobel Prize Milestones

•**2025 Nobel Prize:** Scalable superconducting qubits, fault-tolerant architectures.

Achievements:

•Large-scale Josephson circuits.

•Quantum error correction in hardware.

•Advanced microwave control & readout.

•**Historical Context:**

•2023: Coherent control (Rabi oscillations), energy quantization in Josephson junctions.

•1973: Brian Josephson – prediction of Cooper pair tunnelling.

•**Josephson Relations:**

• $I = I_c \sin\phi, \quad V = \frac{\hbar}{2e}\frac{d\phi}{dt}$

where $\Phi_0 = (h/2e)$ flux quantum.

Nobel Prize summary

Microwave Control: Classical vs Quantum

Shapiro Steps (1963–64): $V_n = n\frac{hf}{2e} = n\Phi_0 f$

Perfect voltage quantization under microwave drive.
Basis for voltage standards.

Quantum Connection:

$$E = hf$$

Microwaves set photon energy for qubit transitions.

Visual:

Up: Tilted washboard potential with quantized levels (qubit physics).
Down: I–V curve with Shapiro steps (staircase pattern).

Timeline:

1962: Josephson prediction →
1963–64: Shapiro steps →
1973: Nobel Josephsson →
2023: Quantum control →
2025: Scalable architectures.



John Clarke, Michel Devoret and John Martinis

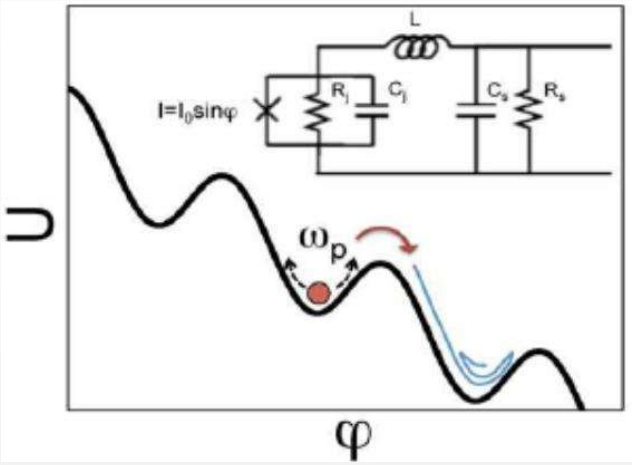

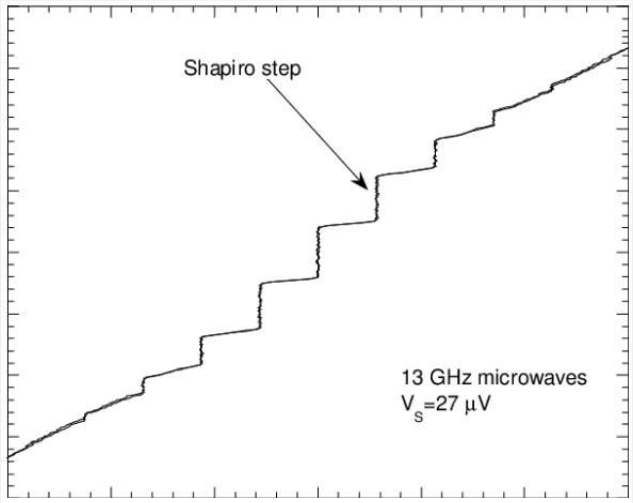

7: Experimental I-V characteristics of a Josephson junction showing Shapiro steps. The step interval (V S) is 27 μV.

The Capacitor

Voltage, Current and energy

- Q = Charge, 2e for cooper pairs
- V = Voltage
- I = Current
- W = Energy
- C = Capacitance
- L = Inductance

The Inductor

Voltage, Current

$$V = L \cdot \frac{dI}{dt}$$

$$I_J = \frac{1}{L_J} \int V \cdot dt$$

The circuit current

$$I_s = C \cdot \frac{dV}{dt} + \frac{V}{R} + \frac{1}{L_J} \int V \cdot dt$$

The classical circuit

$$Q = C \cdot V$$

$$i = \dot{Q} = C \cdot \frac{dV}{dt}$$

$$W = \frac{1}{2} C \cdot V^2 = \frac{Q^2}{2 \cdot C}$$

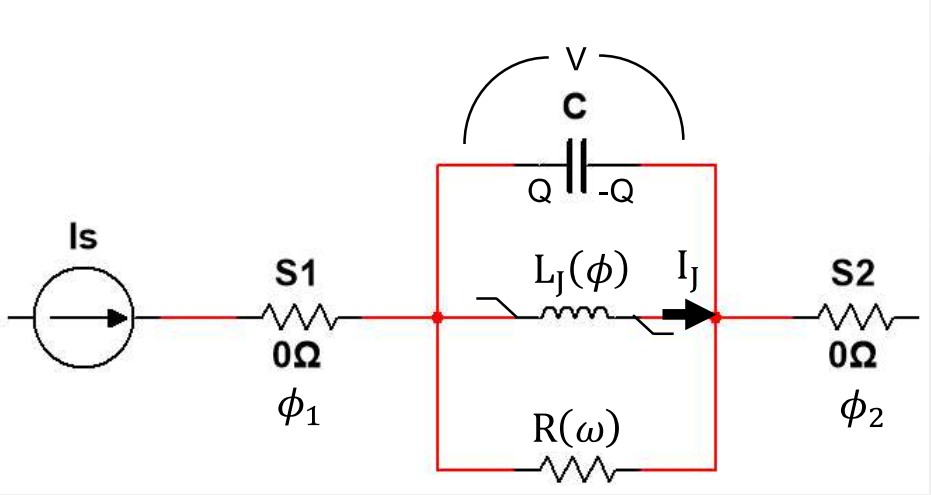

S1, S2 = Superconductors

$$\phi = \phi_2 - \phi_1$$

Quantum physics

Discrete energy levels

- Particles are waves (λ)
- Quantized states are standing modes

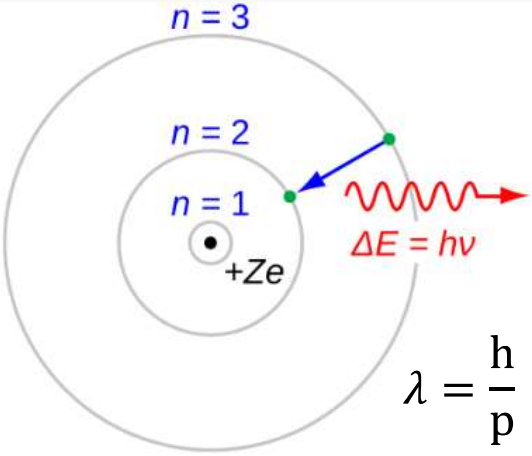



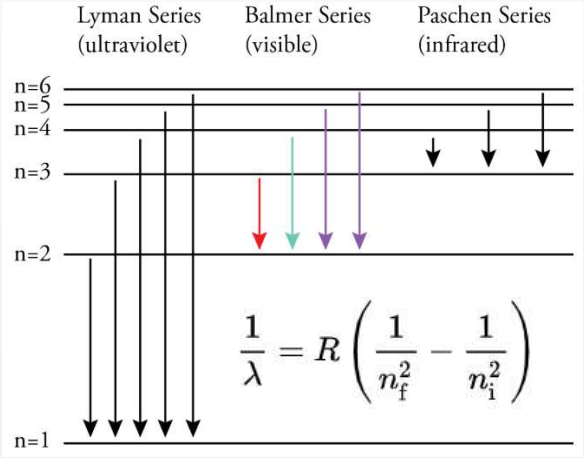

Tunnelling

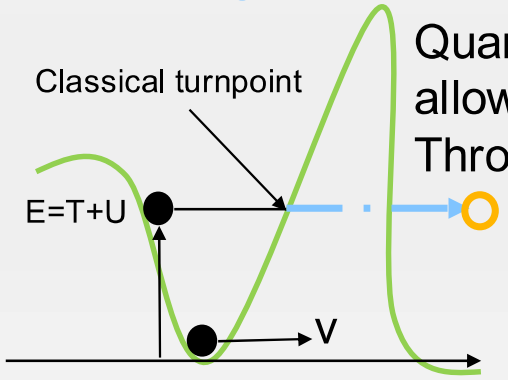

Quantum mechanics allows it to tunnel Through the barrier

Wave-equation

$$\frac{d^2\psi}{dx^2} + \frac{2m}{\hbar^2}(E - V)\psi = 0$$

$$k^2 < 0$$

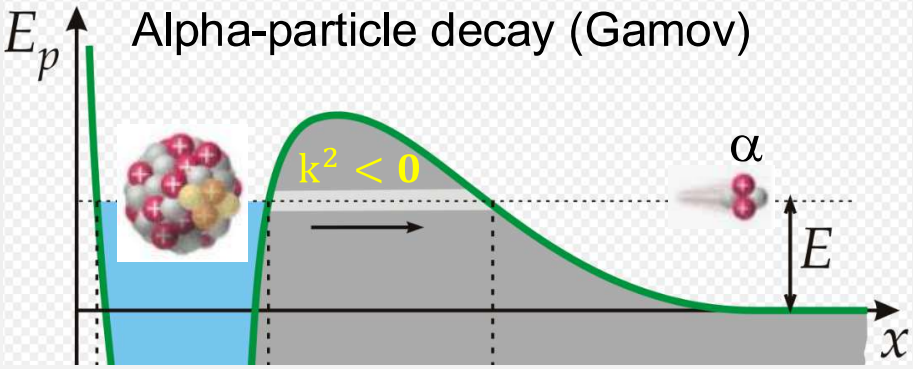

Superconductivity

Resistance

Property of certain materials to conduct DC electricity without energy loss, R=0, when they are cooled below a critical temperature: $T<T_c$

Cooper pairs, phase, coherence

Electrons form bound pairs via phonon-mediated attraction → behave as bosons. **Bose–Einstein condensate:**
All Cooper pairs occupy the same quantum ground state → macroscopic wavefunction.

ξ=coherence length
ξ≈30−100nm

$$\Psi(\mathbf{r}) = \sqrt{n_s(\mathbf{r})}\, e^{i\phi(\mathbf{r})}$$

London's equations

(1) $\frac{\partial \mathbf{J}_s}{\partial t} = \frac{n_s q^2}{m^*}\mathbf{E},$ dJ/dt=0 so E=0 inside → SC! $(\mathrm{E} = \rho \cdot \mathrm{j}) \rightarrow \rho = 0$

(2) $\nabla \times \mathbf{J}_s = -\frac{n_s q^2}{m^*}\mathbf{B}$ i) Stoke on closed loop→ $\Phi = n\Phi_0$

Flux-quanta $\Phi_0 = h/2e.$

SQUID

Meissner effect

ii) Use Ampere's law on (2): $\nabla \times \mathbf{B} = \mu_0 \mathbf{J}_s$ $\nabla^2 \mathbf{B} = \frac{1}{\lambda^2}\mathbf{B}$ $\mathbf{B}(x) = \mathbf{B}_0 e^{-x/\lambda}$

Expulsion of magnetic field from a superconductor when T<Tc

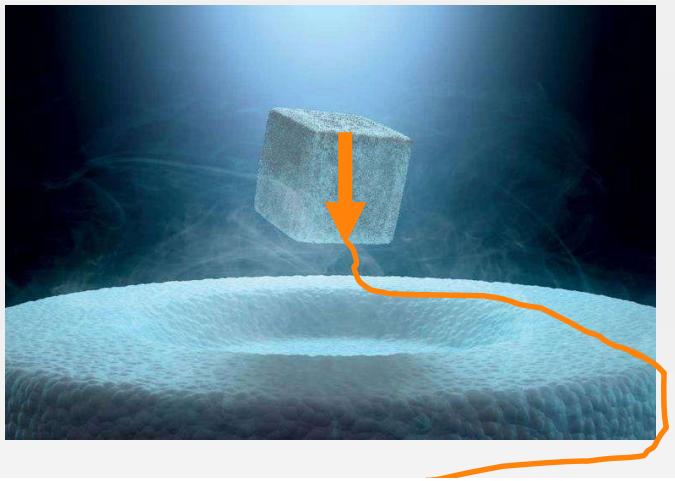

S-I-S junction theory

Josephsson, 1962

$$\Psi_k = \sqrt{\rho_k} e^{i\phi_k}$$

$$i\hbar \frac{d}{dt}\begin{pmatrix}\Psi_1 \\ \Psi_2\end{pmatrix} = \begin{pmatrix}E_1 & -E_J \\ -E_J & E_2\end{pmatrix}\begin{pmatrix}\Psi_1 \\ \Psi_2\end{pmatrix}$$

- Ψ_k =macroscopic wavefunction of superconductor k
- E_J =coupling energy (Josephson energy)

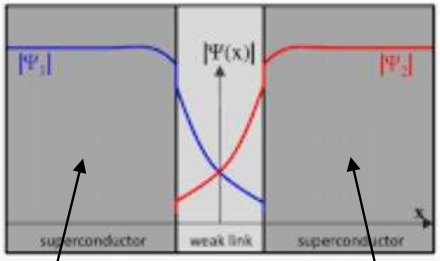

$$\phi = \phi_2 - \phi_1$$

(1) $$\frac{d\phi}{dt} = \frac{2eV}{\hbar}$$

(2) $$I = I_c \sin(\phi) \qquad I_c = \frac{2e}{\hbar} E_J$$

$$I_C = C\frac{dV}{dt} = C\frac{d}{dt}\left(\frac{\hbar}{2e}\frac{d\phi}{dt}\right) = C\frac{\hbar}{2e}\frac{d^2\phi}{dt^2}$$

$$I_R = \frac{V}{R} = \frac{1}{R}\left(\frac{\hbar}{2e}\frac{d\phi}{dt}\right)$$

Semi-classical circuit equation

$$C\frac{\hbar}{2e}\frac{d^2\phi}{dt^2} + \frac{\hbar}{2eR}\frac{d\phi}{dt} + I_c \sin(\phi) = I_s$$

$$\frac{dI_J}{dt} = I_c \cos\phi \cdot \frac{2eV}{\hbar} \rightarrow L_J(\phi) = \frac{\hbar}{2eI_c \cos\phi}$$

Josephsson-junction
"Non-linear Inductor"

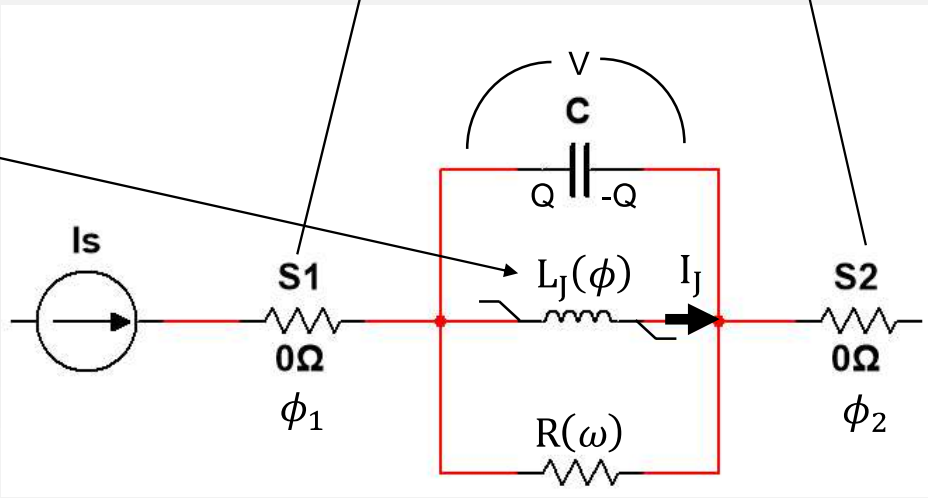

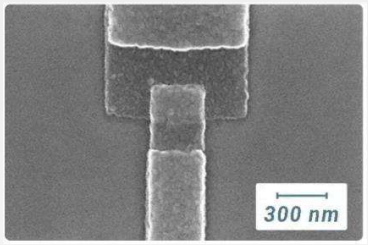

$$Q = C\frac{\hbar}{2e}\dot{\phi}$$

Quantizing the “capacitor”

$$L = T - U \quad \frac{C}{2}\left(\frac{\hbar}{2e}\right)^2 \dot{\phi}^2 + E_J \cos\phi + \frac{\hbar}{2e} I_s \phi$$

Kinetic energy, T – potential energy U(ϕ)



Brian D. Josephson

Tilted washboard potential

$$U(\phi) = -E_J \cos\phi - \frac{\hbar}{2e} I_s \phi$$

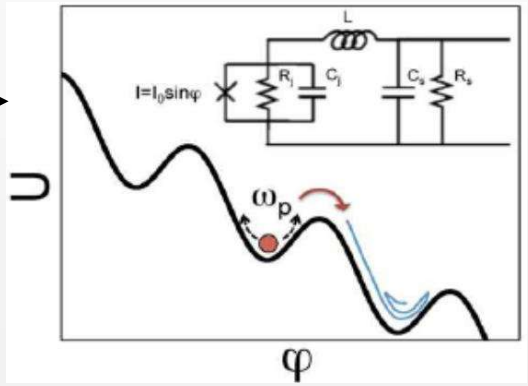

Hamiltonian, H, E=T+U

$$H(Q,\phi) = \frac{Q^2}{2C} - E_J \cos\phi - \frac{\hbar}{2e} I_s \phi$$

Feynman path integral Kernel, A → Schrödinger

$$\mathcal{A} = \int \mathcal{D}[\phi(t)] \exp\left[\frac{i}{\hbar}\int\left(\frac{C}{2}\left(\frac{\hbar}{2e}\right)^2 \dot{\phi}^2 + E_J\cos\phi + \frac{\hbar}{2e} I_s\phi\right) dt\right]$$



Feynman c. 1965

→ $$i\hbar\frac{\partial\Psi(\phi,t)}{\partial t} = \left[-4E_C\frac{\partial^2}{\partial\phi^2} - E_J\cos\phi - \frac{\hbar}{2e} I_s\phi\right]\Psi(\phi,t)$$

$$E_C = \frac{e^2}{2C}$$ ← Kinetic factor

C is similar as mass, m in particle Schrödinger
The wave packet cannot be infinite thin,
Low capacitance → E→infinity

$$\left[-4E_C\frac{d^2}{d\phi^2} - E_J\cos\phi - \frac{\hbar}{2e} I_s\phi\right]\Psi(\phi) = E\,\Psi(\phi)$$

E=Energy

ODE eigenvalue equation in “space coordinate” ϕ

We could now find meta-stable quantum states E_n in the tilted potential

Heisenberg:

$$\Delta\phi\,\Delta n \geq \frac{1}{2}$$

n=Q/2e

Quantum states

Resonant tunnelling

Tilted washboard potential –controlled by current, Is:

$$U(\phi) = -E_J \cos\phi - \frac{\hbar}{2e} I_s \phi$$

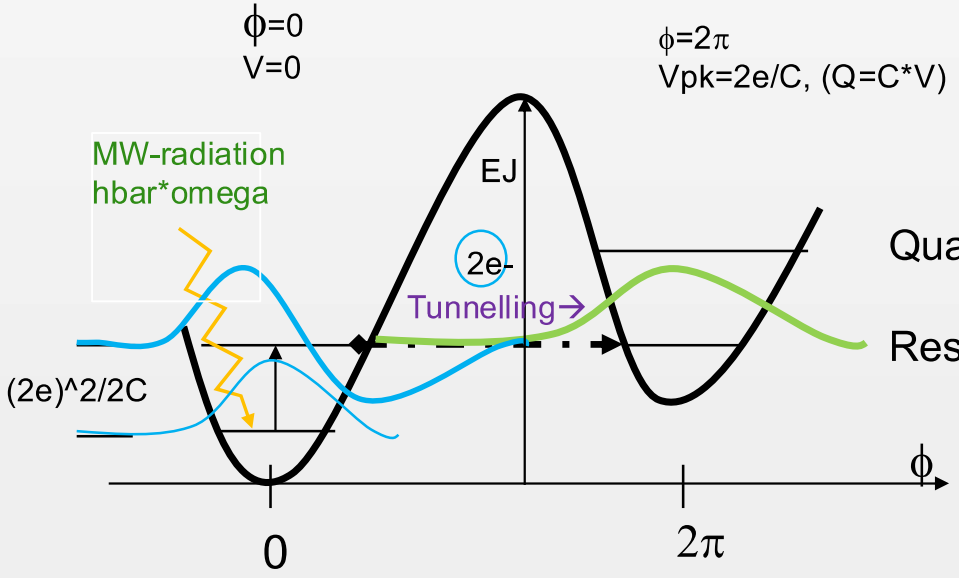

Quantum states (meta-stable)

Resonant tunnelling

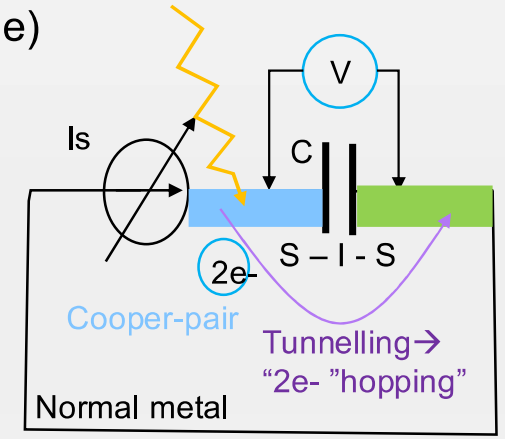

Is = current (controlling)

The Berkeley group experiments

John Clarke, John Martinis and Michel Devoret

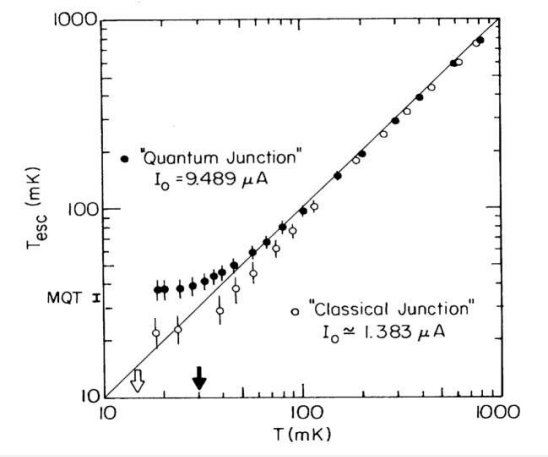

The graph proves that at millikelvin temperatures, a Josephson junction escapes its potential well by quantum tunneling rather than thermal activation (k_BT), because the effective escape temperature stops following the real temperature.

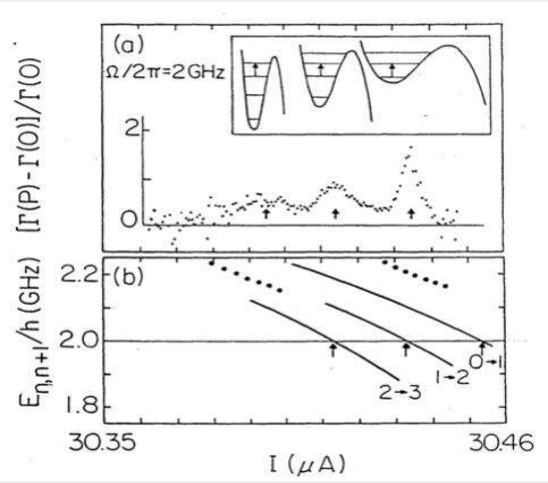

By shining microwaves and varying the bias current, researchers observed tunneling from specific excited states in a Josephson junction. The results agree with quantum theory, proving that the junction's phase behaves as a quantum particle with discrete energy levels.

- These peaks correspond to transitions like:
- 0 → 1
- 1 → 2
- 2 → 3

When "it" tunnels out, the voltage jumps, and that is recorded (not with transmission as today)

Qubits and encryption

Qubits, Operators & Quantum Encryption (BB84)

Qubits & States, Bloch-sphere

•A qubit:

$$|\psi\rangle = \alpha\,|0\rangle + \beta\,|1\rangle, \quad |\alpha|^2 + |\beta|^2 = 1$$

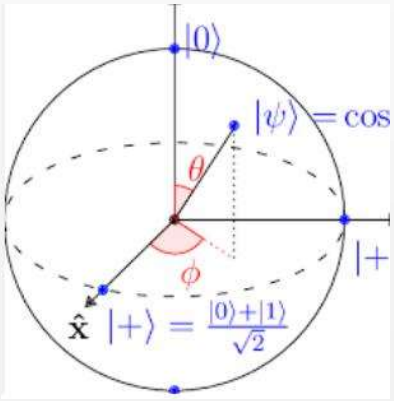

•Bases:

- **Z basis:** $|0\rangle$, $|1\rangle$
- **X basis:** $|+\rangle = (|0\rangle+|1\rangle)/\sqrt{2}$, $|-\rangle = (|0\rangle-|1\rangle)/\sqrt{2}$

Operators

•Rotations:

$$R_x(\theta), R_y(\theta), R_z(\theta)$$

•Pauli matrices generate these rotations.

Example: **BB84 Protocol**

•**Alice** sends qubits in random basis (Z or X).
•**Bob** measures in random basis.
•**Eve** cannot intercept without disturbing the state (no-cloning theorem).
•After basis reconciliation, Alice & Bob share a secure key.

Controlling Qubits

Pauli and Rotation matrices on Qubit states by Rabi Oscillation pulse-lengths t_p

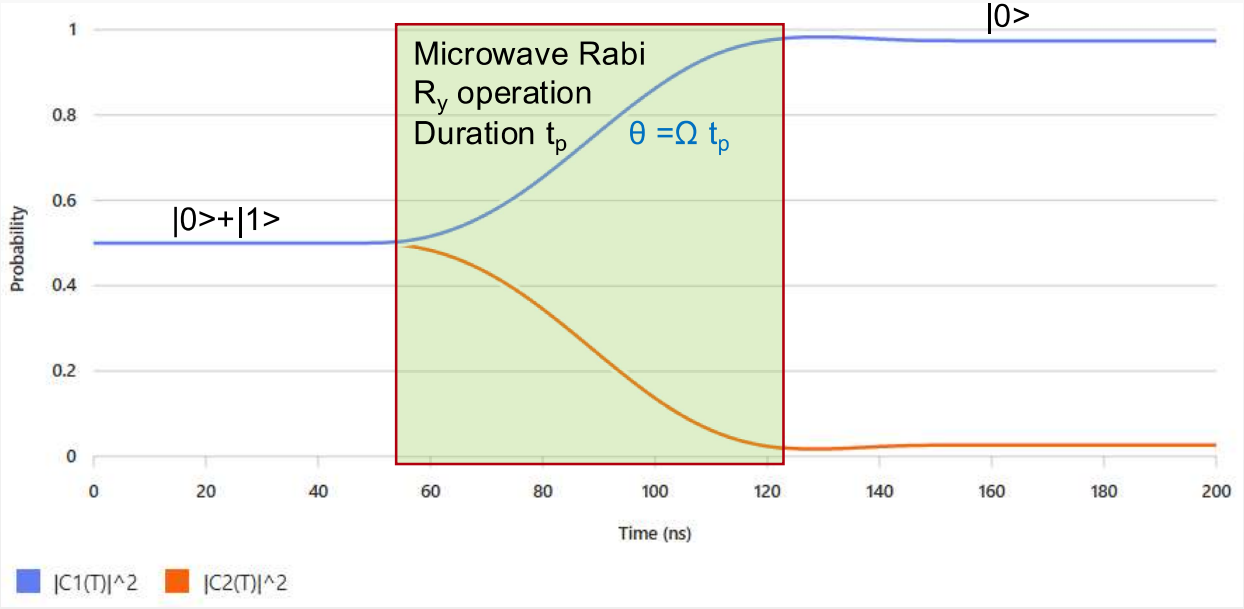

Visualizing **Rabi oscillations with pulse-time control** in a qubit system. It clearly demonstrates:

- **Initial superposition** $|0\rangle + |1\rangle$
- **Microwave pulse applied for a controlled duration**.
- **Population transfer** toward $|0\rangle$ after the pulse.

$$|\psi\rangle = \frac{|0\rangle + |1\rangle}{\sqrt{2}} = |+\rangle \qquad R_y(-\pi/2) = e^{+i\frac{\pi}{4}\sigma_y} \qquad R_y(-\pi/2)|+\rangle = |0\rangle$$

Bloch-sphere

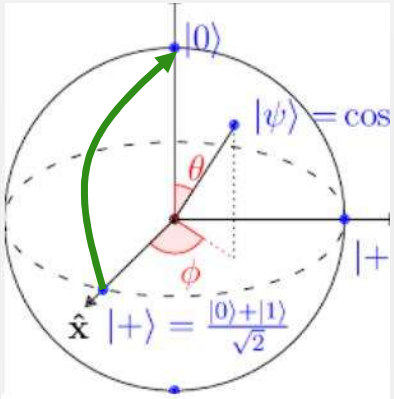

Electric dipole, p_e in an oscillating electric MW field

$$H_{\text{int}} = -\vec{p}_e \cdot \vec{E}(t)$$

Read:

You send a probe microwave tone to the resonator and detect the reflected or transmitted signal.

Connection to Large-Scale Qubit Success

•**Microwave black-body radiation** and other stray signals introduce decoherence and spurious excitations in superconducting qubits.

•As you increase the number of qubits, the complexity of wiring and control lines grows, which means **more potential noise sources**.

•Without aggressive noise suppression:

- Qubit coherence times drop,
- Gate fidelity suffers,
- Error rates increase, making error correction impossible.

Structure and Function of Cryogenic Quantum Processors

Multi-stage Cooling Architecture

Cryogenic processors use multiple cooling stages from room temperature to near 10 millikelvin to reduce thermal noise effectively.

Microwave Control and Readout

Microwave lines deliver precise pulses through cooling stages for qubit manipulation and measurement while maintaining signal integrity.

Superconducting Qubit Fabrication

Qubit chips are fabricated with superconducting materials like aluminum or niobium, featuring Josephson junctions that enable quantum operations. Use Shunt Capacitor on the SIS for better non-linear energy spacings (separate 1→2 and 2→3.

Importance of Cryogenic Environment

Ultra-low temperatures stabilize quantum states by preventing thermal excitation, critical for high fidelity quantum computation.

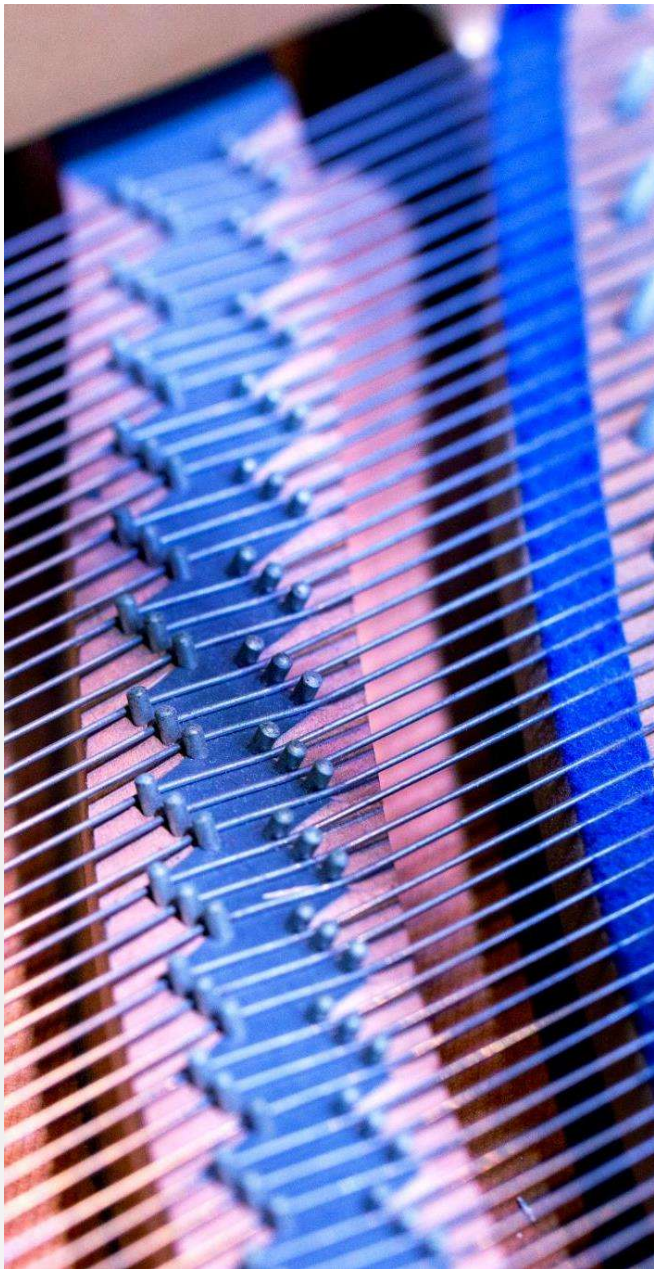

The new emerging quantum computer race

VBIK 1922

"Google's Willow chip breaks quantum computing record"
105 superconducting qubits

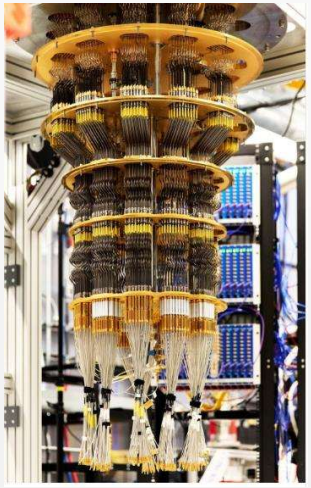

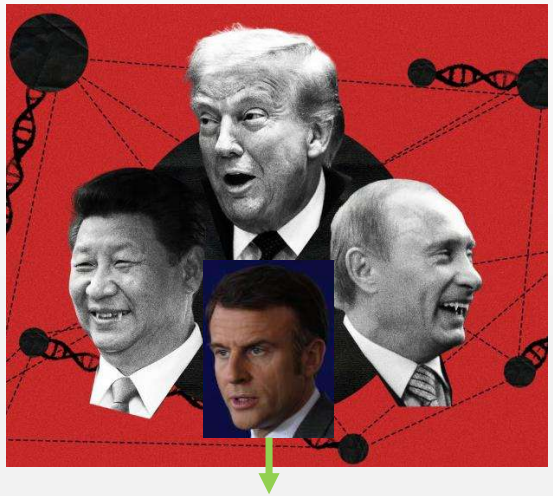

"China's Quantum Leap Unveiled": New Quantum Processor Operates 1 Quadrillion Times Faster Than Top Supercomputers, Rivalling Google's Willow Chip

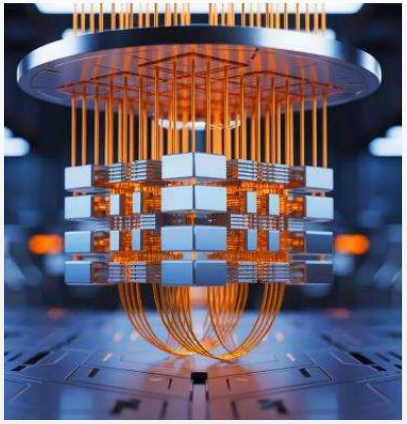

176 superconducting qubits

Plans for **1,000-qubit systems** in the coming years.

COUNTRY	ESTIMATED INVESTMENT	LEADING COMPANIES/LABS	MAIN APPLICATIONS
USA	$1.2–1.5B (gov) + billions private	Google, IBM, Microsoft, Rigetti	Drug discovery, optimization, cryptography, AI
China	$10B+ state-backed	CAS, Alibaba, Baidu	Materials science, secure comms, military
Europe	€1B EU Flagship + €2B Germany	Fraunhofer, Atos, IQM	Climate modeling, pharma, finance
Russia	$300–500M	Russian Quantum Center	Research, cryptography

Then: Moon /Rocket race



9 March 1961 - USSR



27 October 1961 - USA



Thanks!

Questions?

Bonus: BB84 Protocol

Goal: Alice and Bob share a secret key that Eve cannot intercept without detection.

1. **Alice sends qubits**:
   - Random bit (0 or 1) in random basis:
     - Z basis: $|0\rangle$, $|1\rangle$
     - X basis: $|+\rangle$, $|-\rangle$
   - Example sequence:
     Bits: 1 0 1 0
     Bases: Z X Z X
     States: $|1\rangle$ $|+\rangle$ $|1\rangle$ $|-\rangle$
2. **Bob measures**:
   - Chooses random basis for each qubit.
   - Example bases: Z Z X X
   - Measurement results: 1 ? ? –
     (Correct only when basis matches Alice's)
3. **Basis reconciliation**:
   - Alice and Bob announce bases (not bits).
   - Keep only matching basis positions.
   - Example: Positions 1 and 4 → Key = [1, 0]
4. **Eve cannot copy**:
   - Measurement disturbs state (no-cloning theorem).
   - Any interception introduces detectable errors.
5. **Destroy states**:
   After measurement, qubits collapse → cannot reuse.

