HITACHI

HITACHI

Hitachi Energy

Dogger Bank Wind Farm

Göran Isacsson

Internal

©Hitachi Energy Ltd 2025. All rights reserved

Drivers for offshore wind power in UK

- The fear of global warming and the desire to change today's carbon-based energy to green energy has driven the need to use wind as an energy source
- To encourage green energy the UK government gives a fixed price on the energy in a process called Contract for Difference, CfD. It is a bidding were the lowest prices of GBP/MWh win.
- Large wind turbines can only be installed offshore, due to logistics constraints.
- Dogger Bank is a large, shallow sandbank in the North Sea, it is an attractive location for offshore wind farms because it is far away from shore with high average wind and avoiding complaints about the visual impact (Trump).
- The water depth, 20 and 30 meters, is shallow enough for traditional fixed foundation wind turbine designs. With this as a base several developers are planning to set up wind parks at Dogger Bank.
- The first of those is the Dogger Bank Wind Farm, built in three phases each 1200 MW
- All three phases were successful in the UK Governments 2019 CfD auction, with about 500 SEK/MWh The price varies with consumer price index, today about 640 SEK/MWh
- The Dogger Bank wind farm will, when it is fully developed, be the worlds largest offshore wind farm at 3600 MW.

CfD Winners in September 2019

Project Name	Developer	Technology Type	Capacity (MW)	Strike Price (£/MWh)	Delivery Year	Homes Powered	Region
Bulwell Energy Limited	Bulwell Energy Limited	Advanced Conversion Technologies	27.50	39.650	2023/24	50,980	England
Small Heath Bio Power Limited	Small Heath Bio Power Limited	Advanced Conversion Technologies	6.10	41.611	2024/25	11,310	England
Costa Head Wind Farm	Costa Head Wind Farm Limited	Remote Island Wind	16.32	39.650	2023/24	15,750	Scotland
Druim Leathann Windfarm Limited	Druim Leathann Windfarm Limited	Remote Island Wind	49.50	41.611	2024/25	47,760	Scotland
Hesta Head Wind Farm	Hesta Head Wind Farm Limited	Remote Island Wind	20.40	39.650	2023/24	19,680	Scotland
Muaitheabhal Wind Farm	Uisenis Power Limited	Remote Island Wind	189.00	39.650	2023/24	182,340	Scotland
Doggerbank Creyke Beck A P1	DoggerbankOffshoreWindFarm Project1ProjcoLimited	Offshore Wind	1200.00	39.650	2023/24[1]	1,505,330	England
Doggerbank Creyke Beck B P1	DoggerbankOffshoreWindFarm Project2ProjcoLimited	Offshore Wind	1200.00	41.611	2024/25[1]	1,505,330	England
Doggerbank Teeside A P1	DoggerbankOffshoreWindFarm Project3ProjcoLimited	Offshore Wind	1200.00	41.611	2024/25[1]	1,505,330	England
Forthwind	Forthwind Limited	Offshore Wind	12.00	39.650	2023/24	15,050	Scotland
Seagreen Phase 1	Seagreen Wind Energy Limited	Offshore Wind	454.00	41.611	2024/25[1]	569,520	Scotland
Sofia Offshore Wind Farm Phase 1	Sofia Offshore Wind Farm Limited	Offshore Wind	1400.00	39.650	2023/24[1]	1,756,220	England

Dogger Bank Projects
The Beginning

- The development of the wind farm started in 2010 by a consortium of companies including Equinor and SSE
- In 2015, four project areas received planning consent from the UK Government.
- In 2017, SSE and Equinor continued the development of the Creyke Beck A, Creyke Beck B and Teesside A projects under the new name of Dogger Bank Wind Farm, with each partner having 50% ownership and them being built in three phases.
- To recognize their link to the historic Dogger land area, the three phases were renamed to:
  - Dogger Bank A *(formerly Creyke Beck A)*
  - Dogger Bank B *(formerly Creyke Beck B)*
  - Dogger Bank C *(formerly Teesside A)*
- It is now a special purpose company owned by SSE Renewables (40%), Equinor (40%) and Vårgrønn (20%). Vårgrønn is a joint venture between the energy company Plenitude (Eni) and the Norwegian energy entrepreneur and investor HitecVision.
- SSE Renewables is leading on the development and construction of Dogger Bank Wind Farm
- Equinor operates the wind farm until its expected operational life of around 35 years.
- Total budget is about 10 BGBP (125,000 MSEK), whereof 1/3 is for the transmission part.
- The estimated utilization (load factor) for the Dogger Bank Wind Farm is approximately 55% or about 17.3 TWh per year
- The Project is financed by a consortium of banks, in 2020 it was the largest such financing ever for DBA and DBB.

Dogger Bank A, B and C locations



- Dogger Bank is an isolated sandbank within the central to southern North Sea spanning UK, German, Danish and Dutch waters.
- The third phase of Dogger Bank Wind Farm is Dogger Bank C, which is located around 196 km from shore at its closest point.
- Upon completion it will have an installed generation capacity of 1200MW.

Components in the Projects (distances are for Dogger Bank C)

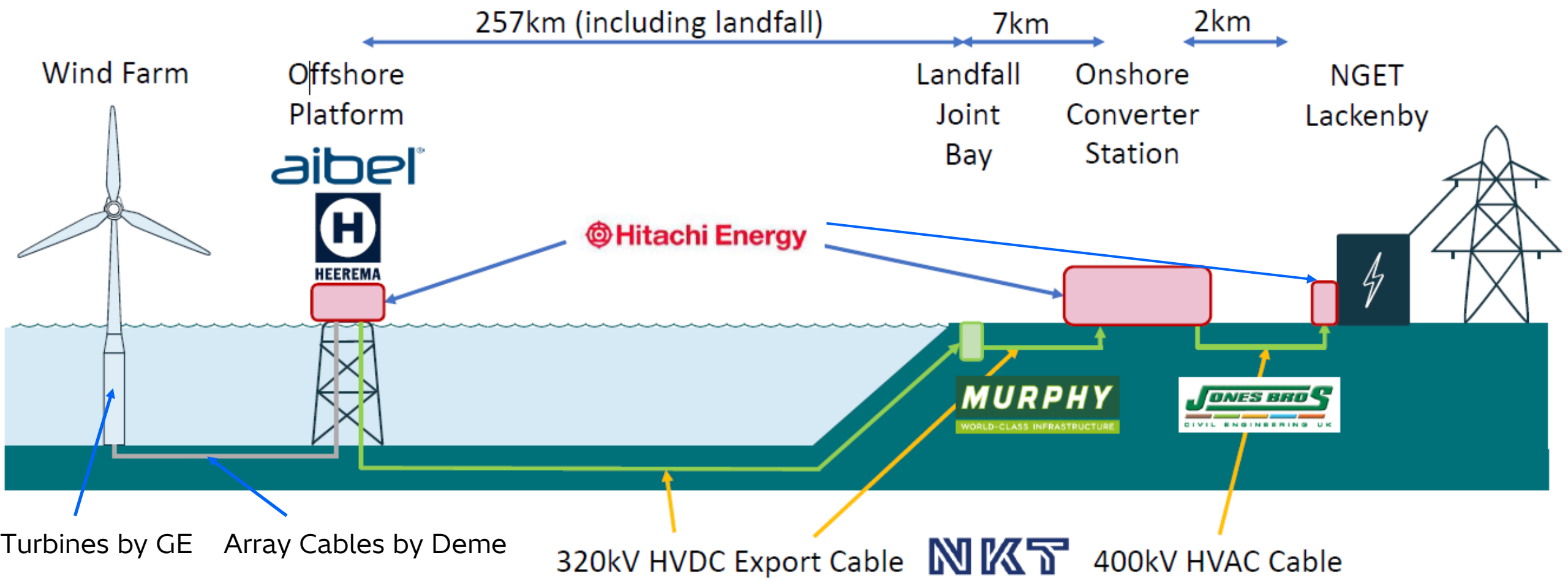

Project Overview- Dogger Bank A, B and C

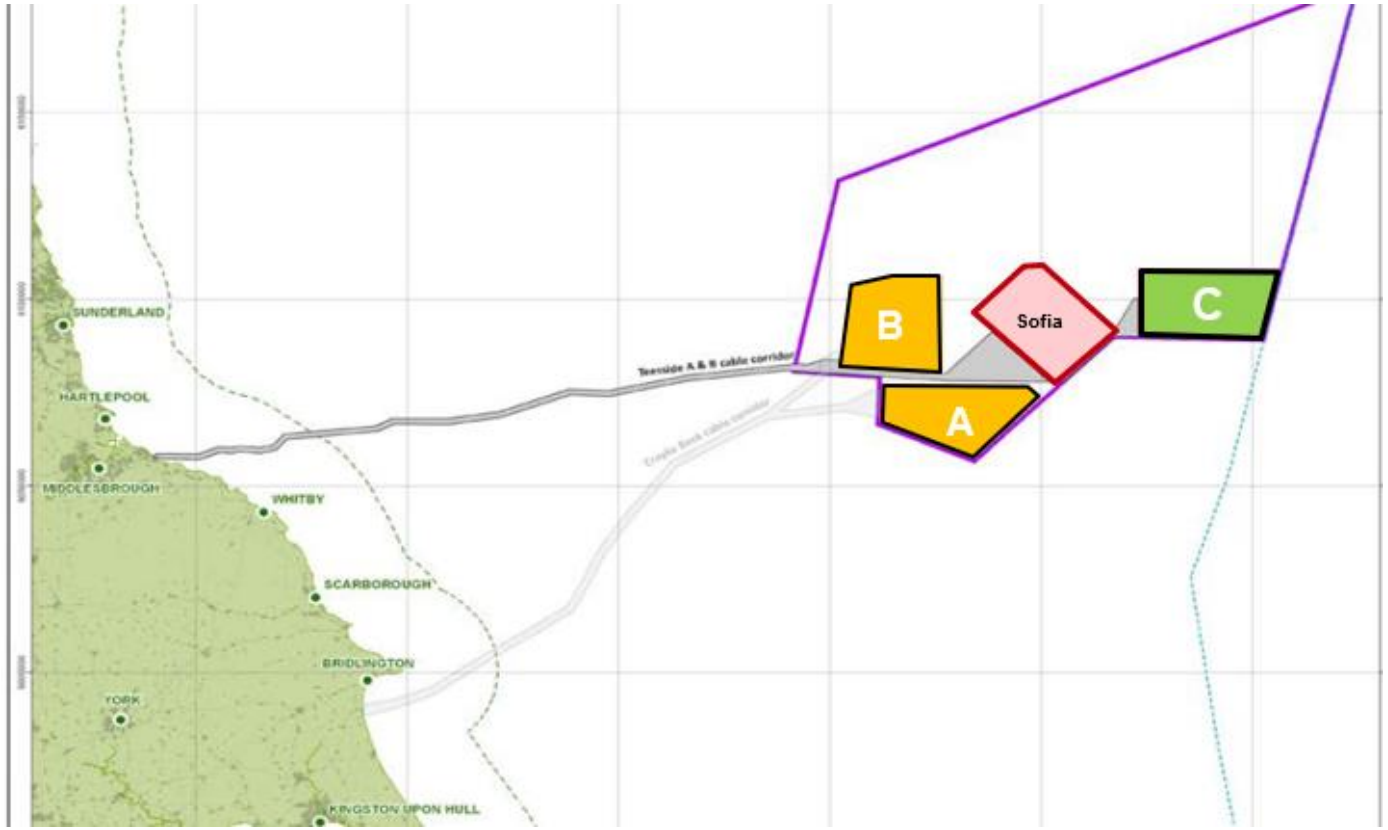

Three Projects each with the following main deliveries, Hitachi scope in green

- Wind Power Generators
  - 95x13 MW (DBC 87x14 MW)
- AC Array Cables between Wind Power Generators and the Platform
- Offshore Platform with the Converter Station
- HVDC Cables from the Platform to onshore HVDC Station
- On Shore Converter Stations at Creyke Beck and Lackenby
- AC Cables from the HVDC Station to the NG Substation
- Additional Bay in the NG Substation

Layout of the wind turbines for Dogger Bank A

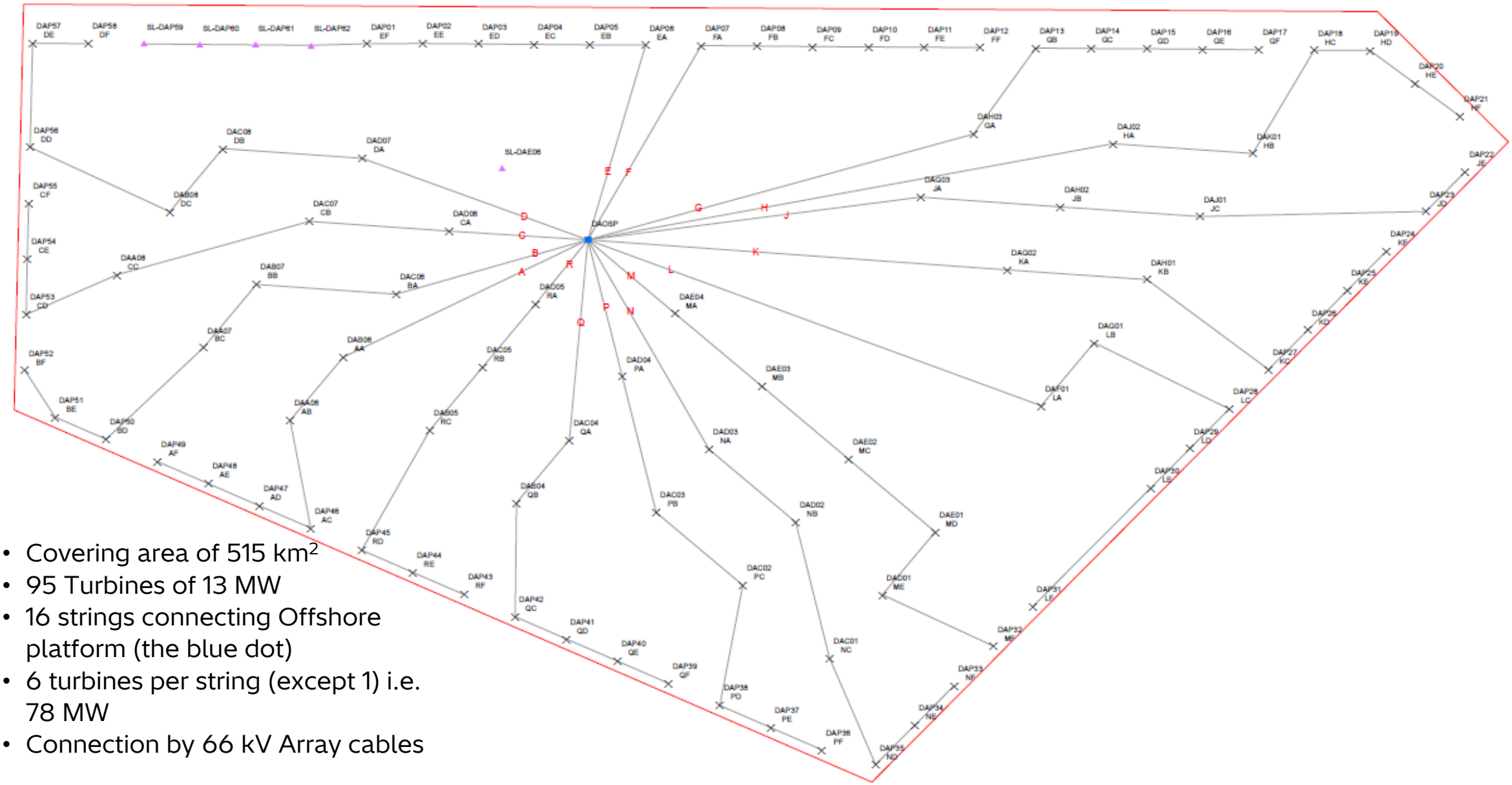

- Covering area of 515 km^2
- 95 Turbines of 13 MW
- 16 strings connecting Offshore platform (the blue dot)
- 6 turbines per string (except 1) i.e. 78 MW
- Connection by 66 kV Array cables

The Wind Turbine

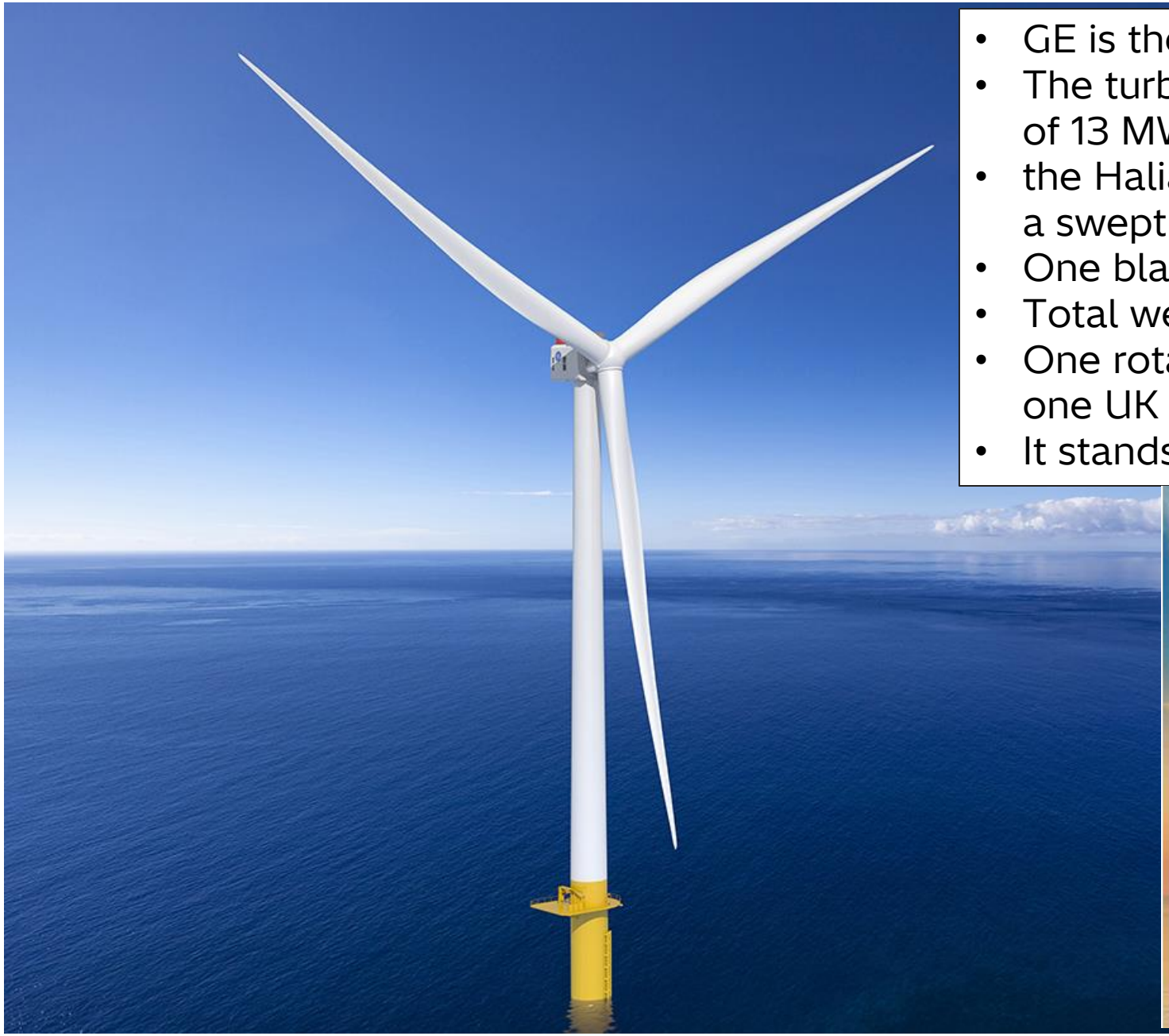

- GE is the supplier of the 277 wind turbines
- The turbines for Dogger Bank A and B has a rating of 13 MW each and for Dogger Bank C it is 14 MW.
- the Haliade-X turbine has a 220 m rotor covering a swept area of 38,000 m2
- One blade measures 107 m in length.
- Total weight 825 ton
- One rotation of the Haliade-X blades can power one UK home for more than two days.
- It stands on a monopile



The Wind Turbine Height Comparison

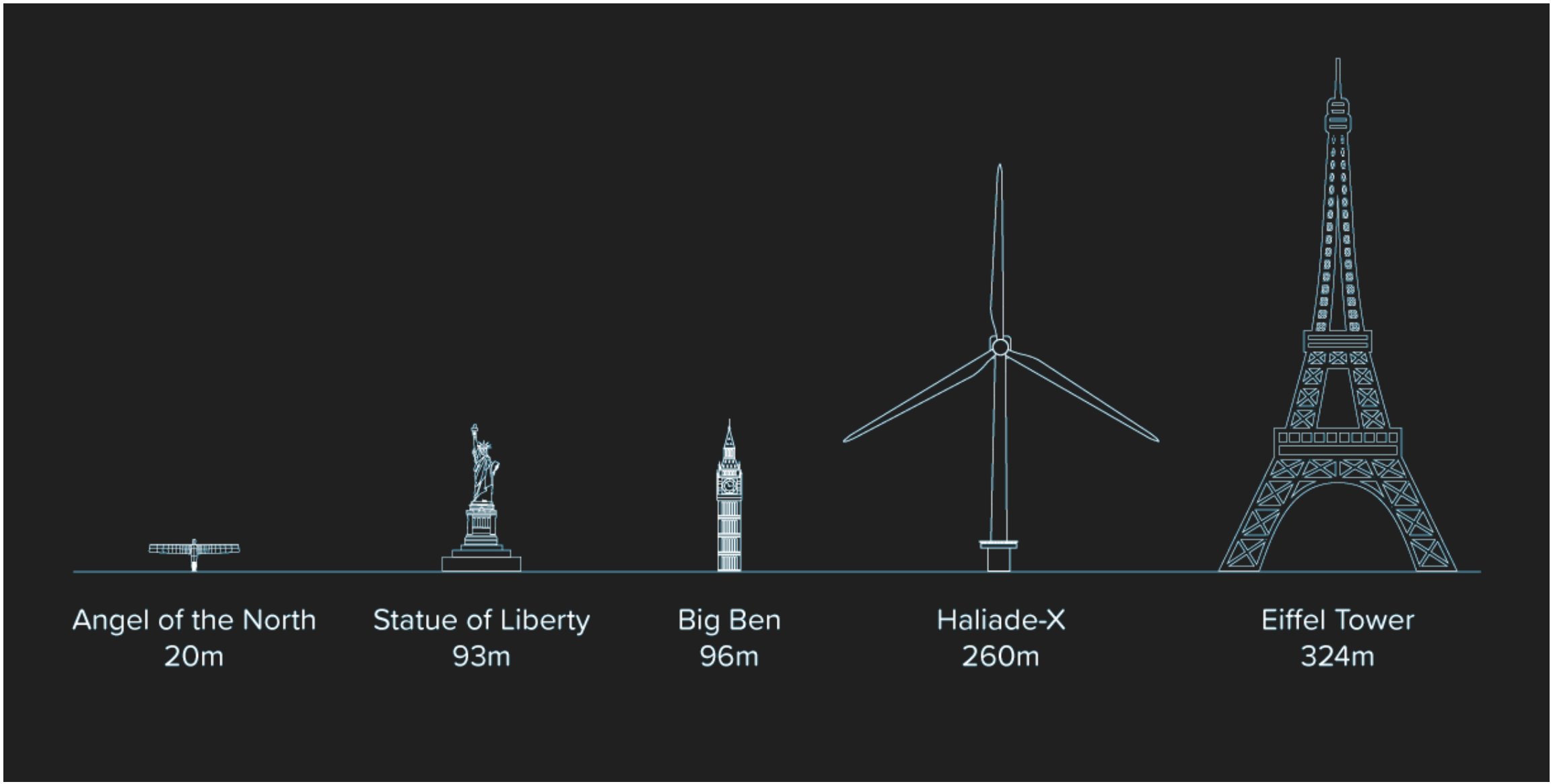

The Wind Turbine
Installation by vessel Jan de Nul



Dogger Bank A offshore wind farm under construction by marine contractor Jan de Nul

Photo: Jan de Nul

The Wind Turbine
Installation vessel Jan de Nul height comparison

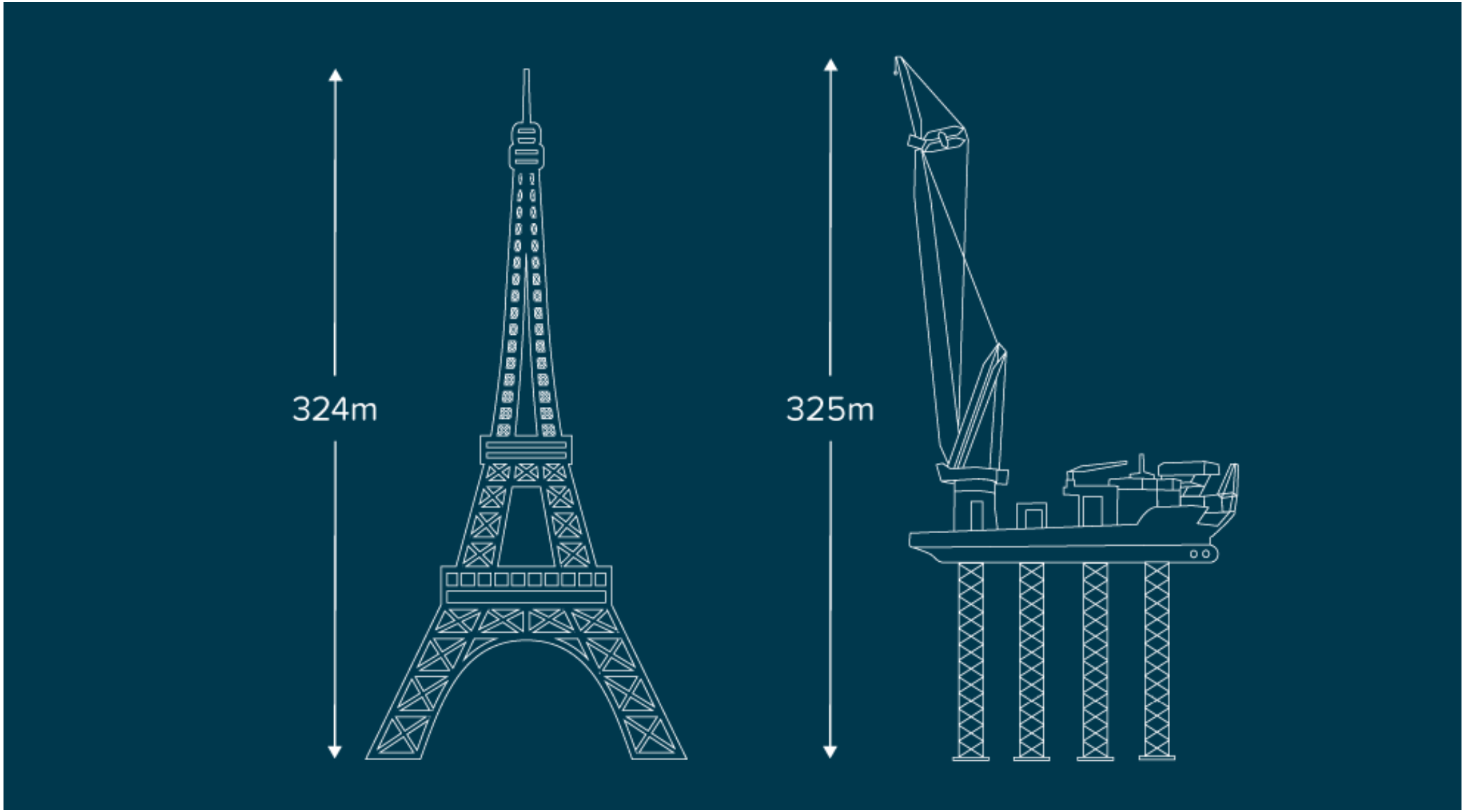

The Wind Turbine
Installation by jack up vessel Jan de Nul



The DC Cable (distances are for Dogger Bank C)

Export Cable

320kV HVDC Export Cable
- 257km subsea (including landfall)
- 7km onshore

400kV AC to National Grid
- 2km



DOGGER BANK WIND FARM

NKT Victoria – Cable Lay Vessel



Network Rail HDD (left)

Completed HVDC joints (right)

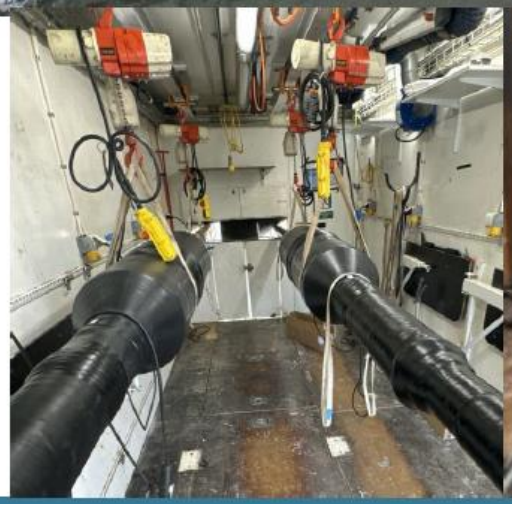

AC Cable joints and link box installation



The Offshore Platform

- Highly efficient design, based on normally unmanned installation, and reliability by design to ensure availability.
- Tonnes per MW reduced by 70% from benchmarks.
- Includes wind farm power collection and systems.

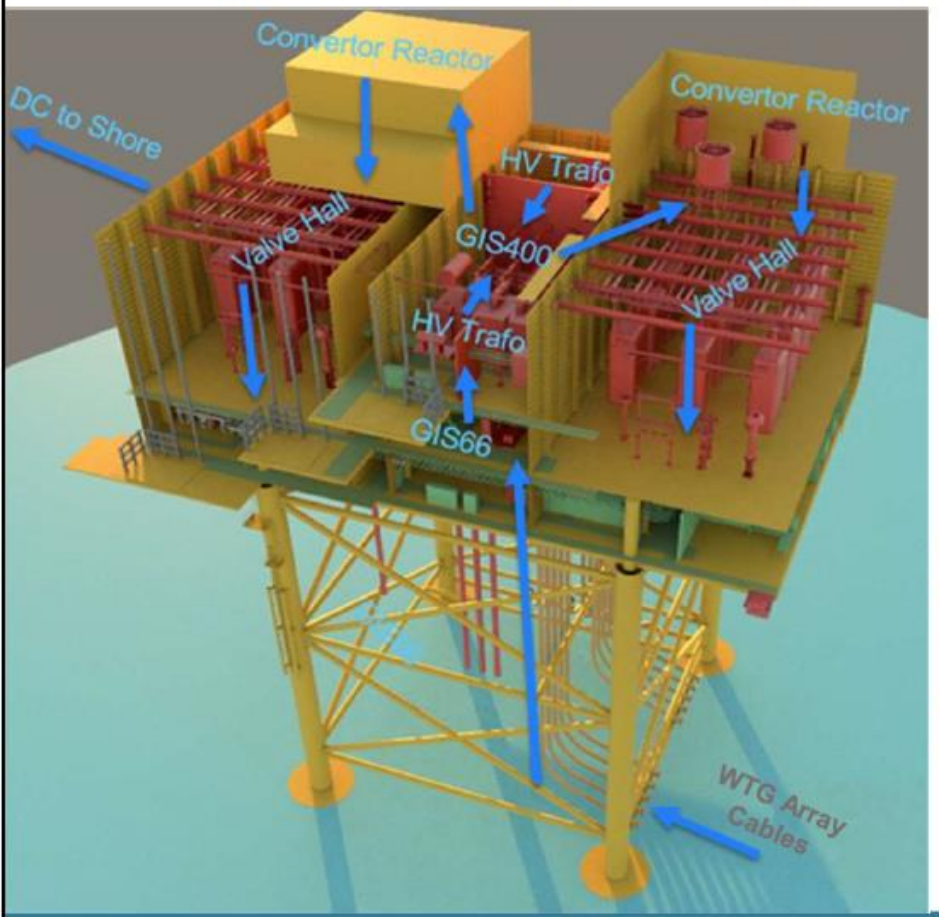



- Fabrication and equipment fit out in Thailand
- HVDC equipment installation and commissioning in Norway
- Jacket fabrication in Sardinia
- Installation by Saipem



The platform
Construction in Thailand August 2021



The platform
Arrival of DBA platform in Haugesund June 2022



The platform
Lifting in of Transformer Oct 2022



Topside installation



The HVDC Project Overview- Dogger Bank A, B and C

Project Size

- 3x1200MW ±320kV HVDC Light Turnkey packages (offshore & onshore converters)

Utility

- Special Purpose Companies owned by Equinor 40%, SSE 40% and Vårgrön 20% *Dogger Bank Offshore Wind Farm Project 1/2/3 Projco Limited*

Timing

•Contract Signature	Oct 2019 (DBA/DBB) Mar 2021 (DBC)
•Dogger Bank A	July 2023
•Dogger Bank B	July 2024
•Dogger Bank C	July 2025

HVDC Theory

HITACHI

What is an HVDC transmission system?

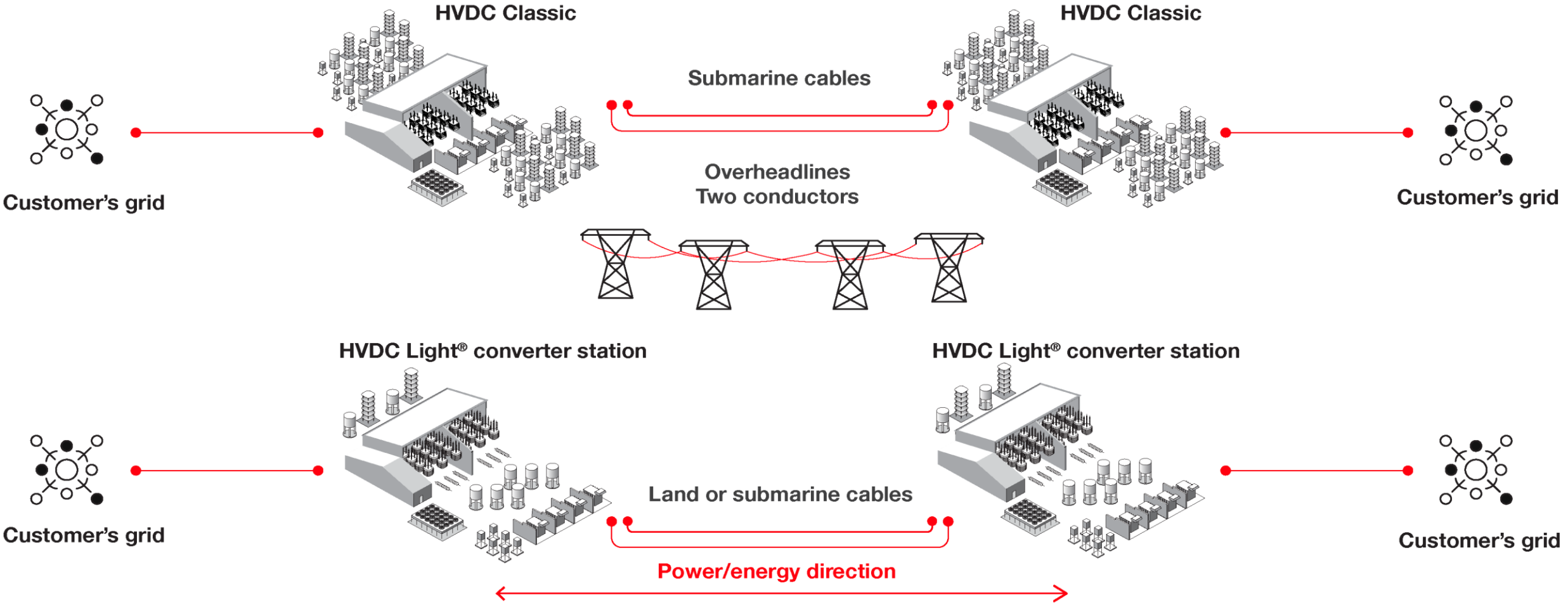

©Hitachi Energy Ltd 2025. All rights reserved

HVDC Light®

HITACHI

HVDC Light is the brand for Hitachi Voltage Source Converter, VSC, technology

VSC was invented by ABB Power Systems, now Hitachi Energy

Weak network?

- Black start power restoration
- Active/reactive power control (STATCOM functionality)
- AC voltage and frequency stabilization (possibly increasing AC grid utilization)

Bi-directional power trade?

- Fast power reversal without pole shift

Integration of renewables?

- Power and voltage control
- Compact solution for minimum footprint, important for offshore

Why use HVDC in Dogger Bank?

- Distance from shore

Why use HVDC Light in Dogger Bank?

- Small footprint
- Black start



©Hitachi Energy Ltd 2025. All rights reserved

HVDC Light® Theory – VSC

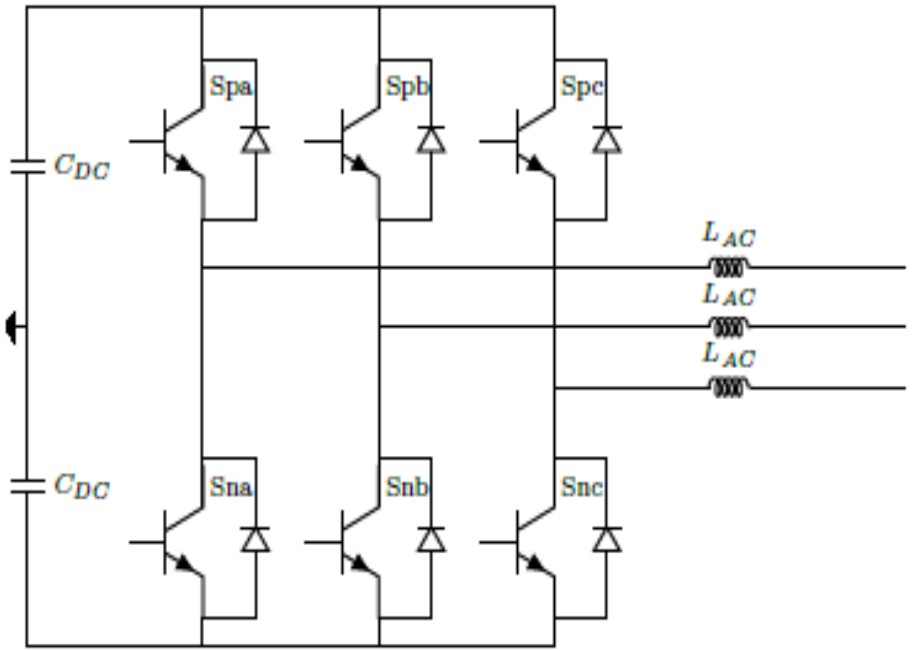

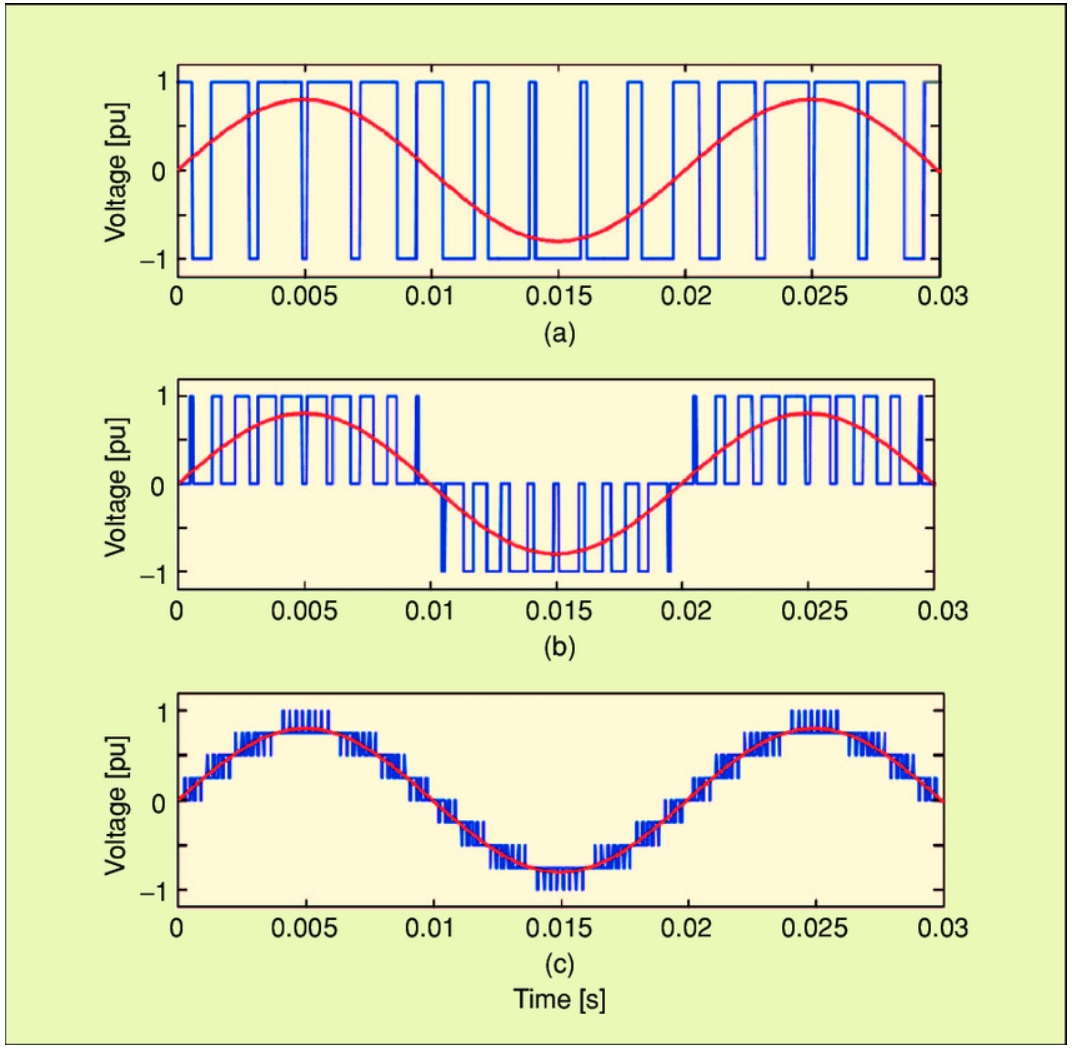

- Two level
- Three level
- Multi level

©Hitachi Energy Ltd 2025. All rights reserved

Dogger Bank Single Line Diagram

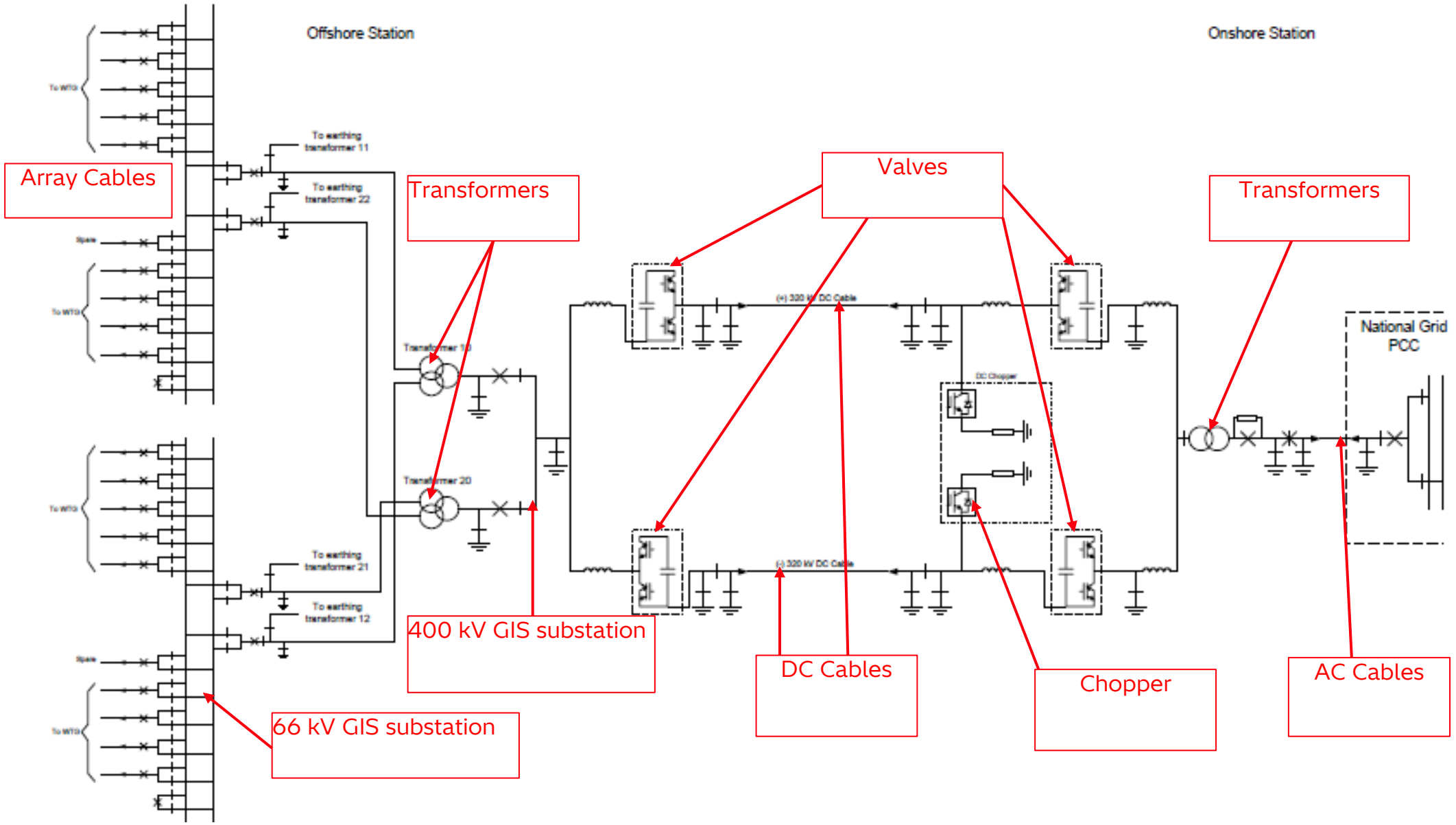

The Valve, BIGBT Hitachi Generation 5



- Suspended
- +/- 320 kV i.e 640 kV over the valves
- 1875 A dc
- Totally 24 structure
- Each structure 8 m high
- BIGBT = IGBT and Diode in same device

The Offshore transformers



- 2 nos of 664 MVA 66/392 kV¤
- Three Phase, Three Winding
- Delta on the 66 kV side due to high current
- Yoke winding for aux pow
- 40% overload capacity
- Total weight 339 ton
- Transport weight 255 ton
- Height 6.6 m

- Purpose of the Transformer
  - Give the right voltage
  - Galvanic separation

The Onshore transformers,



- 3 nos 426 MVA
- 400/379 kV
- Single Phase
- Two windings
- Yoke winding for Aux power
- 1 spare unit
- Sound enclosure
- Total weight 364 ton
- Transport weight 245 ton
- Total height 9.7 m

Onshore Converter station size (in mm)



Offshore Platform installation stages



- Fabrication in Thailand. Installation of all equipment except Transformers, Valves and Reactors
- Installation in Haugesund of Transformers, Reactors and Valves, followed by subsystem test.
- Installation of top side on jacket, connection of cables, followed by system testing at Dogger Bank

Dogger Bank HVDC System and Equipment
DBA and DBB Platforms





Dogger Bank HVDC System and Equipment
DBB and DBA Onshore Stations



Dogger Bank Operation and Performance

- Unmanned stations
- Operation center in port of Tyne outside Newcastle
- Remote control of the whole system
- Shut down maintenance once in three years
- Other maintenance 1 per year
- Operation at 70% in case of offshore transformer failure
- Availability guarantee 99%, predicted 99.3%
- Losses about 3% at 1200 MW
- Fulfillment of UK grid code
  - Steady state AC voltage Control
  - Transient voltage control
  - Power Oscillation damping
  - Sub Synchronous Resonance Damping
  - Limit of harmonics
  - No trip allowed for 3 min without network connection

This has been verified by simulations and later by actual tests.

Dogger Bank today´s Status

Dogger Bank A

- Transmission in operation since July 2023, feeding the platform
- First power in October 2023
- Today all turbines are installed and power flow up to 500 MW

Dogger Bank B

- Transmission in operation since July 2024, feeding the platform
- All turbine foundations are ready, turbine installation started February 2026
- Completion by June 2027

Dogger Bank C

- Transmission is ready for operation since July 2025, but the NG substation is delayed.
- Planned start today is August 2026
- All turbine foundations are ready
- Turbine installation starts June 2026
- Completion by December 2027

HITACHI